10

reprinted from:
A. Plückthun, A. Krebber, C. Krebber, U. Horn, U. Knüpfer, R. Wenderoth, L. Nieba, K. Proba and D. Riesenberg, Producing antibodies in Escherichia coli: From PCR to fermentation. In: Antibody Engineering, J. McCafferty, H. R. Hoogenboom and D. J. Chiswell, Eds. (IRL Press, Oxford, 1996) pp. 203-252.

Producing antibodies in *Escherichia coli*: from PCR to fermentation

ANDREAS PLÜCKTHUN, ANKE KREBBER, CLAUS KREBBER, UWE HORN, UWE KNÜPFER, ROLF WENDEROTH, LARS NIEBA, KARL PROBA, and DIETER RIESENBERG

1. Introduction

The expression of antibody fragments in *Escherichia coli* has become a widely used technique for several reasons; it is, in principle, an easily accessible methodology for anyone used to growing *E. coli*, and it can be advantageously combined with phage-display technology which also makes use of *E. coli* (1–3).

Nevertheless, successes in obtaining large amounts of protein by simply placing genes encoding antibody fragments behind a signal sequence and a strong promoter have been rather mixed. This may at first seem surprising to those molecular biologists who have previously expressed large amounts of their favourite functional protein in *E. coli*, using readily available commercial plasmids. The reason one has to write a chapter about this technology at all lies almost entirely in the protein folding problem and in the individuality of antibodies. The successful expression of high amounts of antibody fragments in *E. coli* is thus an exercise in understanding gene regulation, cell physiology, and, most importantly, protein folding to a sufficient degree to maximize the amount of functional antibody protein.

Therefore, it is the purpose of this chapter to describe some of the problems frequently observed as well as giving possible solutions. In particular, it will be shown in detail how an extremely simple benchtop fermentation of *E. coli* can be used as a more efficient alternative to the traditional shake-flask cultures, and how more sophisticated instrumentation can be used to yield up to several *grams* of functional antibody protein per litre of culture, an amount which generally should overcome any worries that *E. coli* is an unsatisfactory host for antibody production.

The emerging topic, irreversibly linked with expression, is protein folding. The whole point of antibody expression is obviously to obtain active, antigen-binding material. In this context, two related questions are of importance.

The first is a general one, namely in which exact molecular and genetic format to put the variable domains together to obtain a correct binding site. The second question is how to improve the folding properties of the antibody molecule, which has been shown to be the most important yield limiting factor (see below). Fortunately, it has now become possible, at least in some cases, to engineer antibodies to improve folding, and this will be discussed below.

We must base this chapter on a fairly detailed investigation of a relatively small number of recombinant antibodies, about a dozen different ones, which in our laboratory are studied in various formats each with numerous mutants (binding to proteins, peptides, oligosaccharides, hydrophobic or hydrophilic haptens, containing either human or murine frameworks). Even when combining the published literature as much as possible, the database of well-characterized recombinant antibodies is still tiny compared to the 10^{12} possible antibodies; and for every rule emerging there just may exist an exceptional antibody sequence which ignores this rule.

The main part of this chapter will discuss the strategies and factors important for obtaining soluble antibody, after a few candidate antibodies have been identified from phage display, or after cloning from a hybridoma cell line, or having synthesized the genes. We will first discuss the pros and cons of converting the antibody genes into various fragments for expression, such as scFv, Fv, dsFv, Fab, and fusion proteins (*Figure 1*). This will be followed by an overview of the expression strategies available and suitable vectors. We will then discuss progress in protein engineering techniques to improve expression, by eliminating the tendency of the molecule to aggregate, and finally we give procedures to produce antibody fragments in small, medium, and large scale, up to gram amounts.

2. Cloning of antibody variable genes

The first step in an antibody project involves obtaining the antibody genes. We can distinguish four starting scenarios. First, if a hybridoma cell is available, the mRNA must be isolated, and the antibody genes amplified by PCR (*Protocol 1*, see also Chapter 1). Even though only one antibody sequence should, in principle, be encoded by the hybridoma this is not always the case and it can still be advantageous to enrich the correct antibody sequence by phage display. It is not at all uncommon to have additional rearranged antibody sequences present, either from the myeloma fusion partner or from aberrant allelic exclusion in the B-cell fusion partner (4).

Second, a technically similar situation arises when antibodies are to be isolated from an immunized mouse. This involves isolating the spleen and from it all splenic mRNA, which is then amplified by PCR and assembled for phage display. After selecting binding clones, a few candidate antibodies are obtained ready for expression. We will not, however, discuss phage display

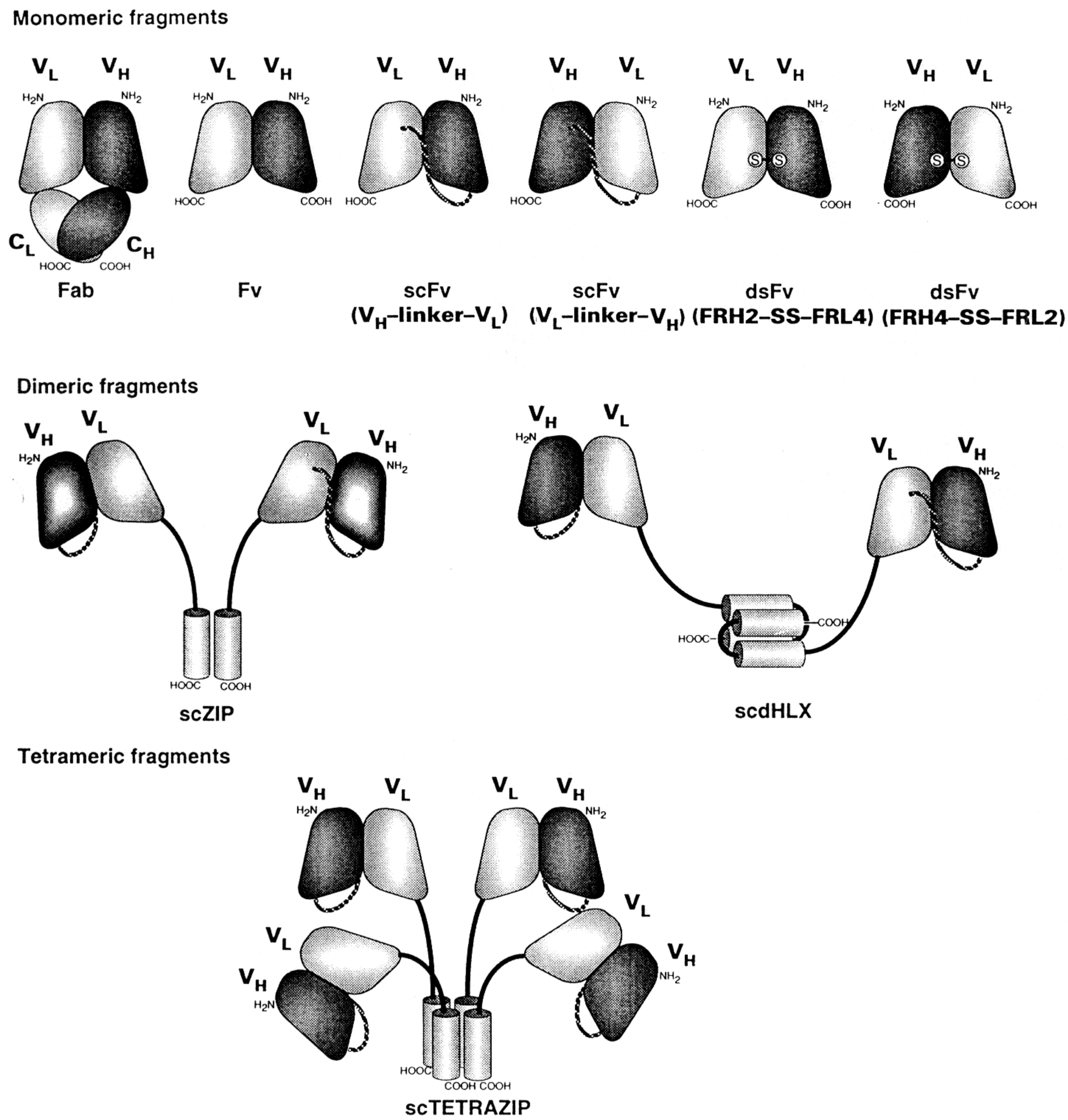

Figure 1. Antibody fragments suitable for functional high-level expression in *E. coli*. For details on the cloning see ref 16; for details on the miniantibodies see Pack *et al.* (31–33); for details on the dsFv fragments see refs 25–27.

or library construction in much detail here, as this is done elsewhere in this volume (Chapters 1, 2, and 8).

Advances have been made in constructing large antibody libraries from germline sequences and synthetic D and J segments (3). In this third scenario, again binding clones need to be selected, usually by phage panning, and a few candidates will then be ready for expression.

The fourth, frequent scenario is that a known antibody sequence needs to be modified. A typical example would be 'humanizing' an antibody, which has shown promise in preclinical mouse experiments, for human therapy (5).

Other examples may include the re-engineering of the variable domains to give higher stability, better folding (see below) or for speciality functions, such as a metal binding site. In this case, a total gene synthesis is often the fastest way. In a number of cases, we have used modifications of the PCR-based assembly method of Prodromou and Pearl (6). The single most important parameter for a speedy gene synthesis by this method is the quality of the synthetic oligonucleotides. These need to be free of one-base deletions (see general comment on *Protocol 1*). Correct clones can be enriched by one round of phage panning, although this actually amounts to curing the symptom.

Protocol 1 describes a procedure for assembling the genes of an scFv fragment, which is a very useful first step in many antibody engineering projects. The scFv fragment can then be easily converted to any other fragment shown in *Figure 1* and engineered further, as discussed throughout the text. The initial procedure of gene assembly can be carried out in the same way both for first cloning into a phage-display vector or directly in an expression vector. Note, however, that optimized display and expression vectors have rather different requirements (see below).

Protocol 1. Assembly of an scFv fragment from a hybridoma

Equipment and reagents

- 1–5 × 10^6 cells from a growing or frozen hybridoma culture
- PCR primers (*Table 1*) and plasmids (*Figure 3*)
- Helper phage (e.g. VCS Stratagene)
- F^+, supE, $recA^-$ strain (e.g. XL1 Stratagene)
- Anti M13-HRP conjugate (Pharmacia Biotech)
- PEG 6000
- DEPC-treated water
- 10 × Amplitaq PCR buffer: 100 mM Tris–HCl, pH 8.3 at 25°C, 500 mM KCl, 15 mM $MgCl_2$, 0.001% gelatin (w/v)
- Standard molecular biology equipment and reagents to:
  - —purify mRNA (Pharmacia QuickPrep mRNA Purification Kit)
  - —perform a cDNA synthesis reaction (Pharmacia Biotech First-Strand cDNA Synthesis Kit)
  - —perform PCR reactions (Chapter 1, *Protocol 3*)
  - —cut and gel purify DNA (Chapter 1, *Protocol 7*)
  - —ligate and transform DNA (Chapter 8, *Protocols 3 and 4*)
  - —grow bacteria and phages (Chapter 1, *Protocols 8–11*)
  - —perform an ELISA (Chapter 1, *Protocol 13*)

A. *Synthesis of cDNA*

1. Take 1–5 × 10^6 cells from a growing or frozen hybridoma culture and perform an mRNA preparation as described in the Pharmacia QuickPrep mRNA Purification Kit.[a]
2. Ethanol precipitate the purified mRNA which is present in a volume of 0.75 ml elution buffer as follows:

   prepare 2 aliquots: each containing:

   - mRNA 0.32 ml
   - ethanol (chilled to –20°C) 0.8 ml

- glycogen (10 mg/ml) 10 µl
- 2.5 M K-acetate, pH 5.0 32 µl

3. Collect the precipitated mRNA from one aliquot by centrifuging at 16 000 *g*, 4°C for 30 min.[b]
4. Wash with 1 ml 90% ethanol and dissolve in 20 µl H_2O (diethylpyrocarbonate-treated).
5. The mRNA solution is now ready for cDNA synthesis. Add 1 µl cDNA synthesis primer[c] and heat the solution to 65°C for 10 min.
6. Centrifuge the sample as before and add 1 µl 200 mM DTT and 11 µl Bulk First-Strand Reaction Mix.[d]
7. Incubate at 37°C for 1 h.

B. *Preparation of PCR products*

1. Use 5 µl of the completed first-strand cDNA reaction for PCR amplification of V_L and V_H.

   PCR conditions[e]:

   - cDNA 5 µl
   - dNTPs (10mM each) 1 µl
   - AmpliTaq 10 × PCR Buffer 5 µl
   - 1 µl LB primer mix (100 pmol/µl) or HB primer mix (100 pmol/µl), respectively 1 µl
   - 1 µl LF primer mix (100 pmol/µl) or HF primer mix (100 pmol/µl), respectively 1 µl
   - H_2O 37 µl
2. Add wax or mineral oil and heat for 5 min to 92°C.
3. Add 2.5 units AmpliTaq and perform the following 7 cycles: 1 min at 92°C, 30 sec at 63°C, 50 sec at 58°C, and 1 min at 72°C. Followed by 23 cycles:[f] 1 min at 92°C, 1 min at 63°C, and 1 min at 72°C.
4. Gel-purify the V_L and V_H genes and determine the DNA concentration of both chains.[g]

C. *Assembly of scFv gene*

1. Use equimolar amounts of both domains (approximately 10 ng) for the assembly PCR[h]:

   - V_L 10 ng
   - V_H 10 ng
   - 10 × PCR buffer 5 µl
   - dNTPs (10 mM each) 1 µl
   - $MgSO_4$ optimized for the enzyme and the template
   - H_2O to an end volume of 50 µl
2. Add wax or mineral oil and heat for 5 min to 92°C.

Protocol 1. *Continued*

3. Add 1–2 units polymerase and perform 2 cycles: 1 min at 92 °C, 30 sec at 63 °C, 50 sec at 58 °C, and 1 min at 72 °C.
4. Add 1 μl scfor and scback primer mix[e] (each primer 50 pmol) and run 5 additional cycles as described in step 3.
5. Continue with 23 cycles: 1 min at 92 °C, 1 min at 63 °C, and 1 min at 72 °C.
6. Gel-purify the scFv antibody gene.

D. *Digestion and cloning of scFv gene*

1. Perform a *Sfi*I digest for 3–4 hours at 50 °C (overlay with mineral oil).
2. Purify the digested fragment and ligate it into *Sfi*I digested pAK100 or pAK200 vector (molar ratio vector to insert 1.5 : 1).

• vector DNA	200 ng
• scFv gene fragment	20 ng
• T4 ligase	1 unit
• 10 × ligase buffer with 10 mM ATP	2 μl
• add H_2O to a final volume of	20 μl

Incubate overnight at 16 °C.

3. Transform 5–10 μl of the ligation reaction into competent XL1Blue (Stratagene) cells.
4. Plate on 2 × YT, 1% glucose, Cam (30 μg/ml) plates.

E. *Screening for binders*

1. Pick 10 colonies and grow them separately in 2 ml 2 × YT, 1% glucose, Cam (30 μg/ml) until they reach an OD_{600} = 0.5.
2. Add 2 ml 2 × YT, 1% glucose, Cam (30 μg/ml), 1 mM IPTG, 10^{10} p.f.u. VCS helper phage (Stratagene) and grow overnight or 6 h at 37 °C.[i]
3. Centrifuge the culture. Take 1.6 ml supernatant and mix it with 0.4 ml 20% PEG 6000, 2.5 M NaCl in a 2.2 ml Eppendorf cap in order to precipitate the phages.
4. Incubate on ice for 15 min and spin at 16 000 *g*, 4 °C for 20 min.
5. Dissolve the phage pellet in 400 μl PBS containing 2% skimmed milk powder and use 100 μl phage solution per well in an ELISA assay to distinguish functional scFv antibody-displaying phages from those which display a non-functional or non-productive antibody fragment. (See Chapter 1, *Protocol 13*.)

6. If possible include an ELISA control that shows that free antigen is able to compete with bound antigen for phage binding to distinguish non-specific 'sticky' phage from specifically binding phage (see Chapters 2 and 8). In principle the same ELISA protocol which was used for the hybridoma screening procedure should be used. Up to 10^7 bound phages can be detected with an anti M13-HRP conjugate (Pharmacia Biotech) which is a component of the RPAS (Recombinant Phage Antibody System) Detection Module. To minimize background problems, it is highly recommended that 2% skimmed milk powder is included in *all* incubation steps.[j]

[a] According to the manufacturer, this kit can be used for up to 5×10^7 cells, but in order to obtain pure mRNA it is highly recommended that the oligo(dT)–cellulose column is not overloaded. It is not the quantity of mRNA but rather the quality that is most important in generating recombinant scFv antibodies. The use of 5×10^6 cells typically yields 10–20 μg of mRNA.
[b] mRNA can be stored in ethanol at –20 °C for several months.
[c] Use 0.2 μg/μl $pd(N)_6$ or $d(T)_{18}$ or 30 pmol/μl of a specific primer mix (*Table 1*). As far as subsequent PCR reactions are concerned, all three versions are successful; however, for the heavy chain $pd(N)_6$ or specific primers are superior over $d(T)_{18}$, whereas for the light chain no differences can be observed. In order to decide which kind of specific primers should be used it is of advantage to perform an isotype determination with the hybridoma of interest.
[d] All solutions needed for first strand cDNA synthesis, except the specific primer mix which is listed in *Table 1*, come as part of the Pharmacia Biotech First-Strand cDNA Synthesis Kit.
[e] Primers for first PCR: LB (light back), HB (heavy back), LF (light forward), and HF (heavy forward) are primer mixes listed in *Table 1*.

Primers for the second (assembly) PCR: scback, scfor are listed in *Table 1*.
[f] Do not elongate for 10 min at 72 °C at the end since AmpliTaq adds an additional A at the 3′ end of the PCR product in a high fraction of the molecules. Alternatively, use a linker assembly strategy where the additional A matches to the template strand. The use of proof-reading polymerases for the first PCR may be an alternative, but it was found that Taq works more generally, whereas proof-reading polymerases usually require more optimization, e.g. they may require $MgSO_4$ titrations. This can be a problem when only limited template is available. An alternative might be the Expand™ High Fidelity PCR System of Boehringer Mannheim which uses a mixture of Taq (non proof-reading) and Pwo (proof-reading) DNA polymerase in order to combine greater fidelity and higher yields with low error rates.
[g] Using the listed primer mix, the expected lengths of V_L and V_H PCR products are between 375–402 bp and 386–440 bp, respectively (depending on the CDR lengths of the antibody fragment).
[h] A number of proof-reading polymerases like Pwo (Boehringer Mannheim), Pfu (Stratagene), and Vent (New England Biolabs) have worked successfully in our hands. For unknown reasons, different enzymes worked best in different cases. If problems occur it is therefore worthwhile testing several different enzymes, in addition to carrying out $MgSO_4$ titrations.
[i] For some scFvs growth at a lower temperature after infection may be necessary. The phage titre after overnight incubation is in the range of 10^{11} to 5×10^{11} c.f.u. per ml supernatant.
[j] If no functional clone shows up in ELISA of single clones, perform one round of phage panning in order to enrich the functional binders. Problems can occur if the quality of the oligonucleotide primers is not satisfactory (see (m) in General comments below) or if the hybridoma transcribes more than one functional or even non-functional heavy or light chain variable region gene (4). It was found that several kappa chain secreting hybridomas, where X63Ag8.653 myeloma cells were used as a fusion partner, are able to transcribe a functional lambda chain which competes with the kappa V_L gene for in-frame scFv antibody assembly (S. Bornhauser, personal communication). Therefore, it is highly recommended that any lambda chain primer in the PCR reactions is left out if the isotyping indicates that the hybridoma of interest secretes a kappa light chain.

Table 1. Primers for assembling mouse scFv fragments in the orientation V_L–linker–V_H with the vector systems of *Figure 3*

Primer VH back:

	5′ (Gly$_4$Ser)-linker	*Bam*HI	V_H	3′	Degeneracy (d)	µl Mix
HB1	**ggcggcggcggctcc**	ggtggtggtggatcc	GAKGTRMAGCTTCAGGAGTC		8	4
HB2	**ggcggcggcggctcc**	ggtggtggtggatcc	GAGGTBCAGCTBCAGCAGTC		9	4
HB3	**ggcggcggcggctcc**	ggtggtggtggatcc	CAGGTGCAGCTGAAGSASTC		4	3
HB4	**ggcggcggcggctcc**	ggtggtggtggatcc	GAGGTCCARCTGCAACARTC		8	4
HB5	**ggcggcggcggctcc**	ggtggtggtggatcc	CAGGTYCAGCTBCAGCARTC		12	7
HB6	**ggcggcggcggctcc**	ggtggtggtggatcc	CAGGTYCARCTGCAGCAGTC		4	2
HB7	**ggcggcggcggctcc**	ggtggtggtggatcc	CAGGTCCACGTGAAGCAGTC		1	1
HB8	**ggcggcggcggctcc**	ggtggtggtggatcc	GAGGTGAASSTGGTGGAATC		4	2
HB9	**ggcggcggcggctcc**	ggtggtggtggatcc	GAVGTGAWGYTGGTGGAGTC		12	5
HB10	**ggcggcggcggctcc**	ggtggtggtggatcc	GAGGTGCAGSKGGTGGAGTC		4	2
HB11	**ggcggcggcggctcc**	ggtggtggtggatcc	GAKGTGCAMCTGGTGGAGTC		4	2
HB12	**ggcggcggcggctcc**	ggtggtggtggatcc	GAGGTGAAGCTGATGGARTC		2	2
HB13	**ggcggcggcggctcc**	ggtggtggtggatcc	GAGGTGCARCTTGTTGAGTC		2	1
HB14	**ggcggcggcggctcc**	ggtggtggtggatcc	GARGTRAAGCTTCTCGAGTC		4	2
HB15	**ggcggcggcggctcc**	ggtggtggtggatcc	GAAGTGAARSTTGAGGAGTC		4	2
HB16	**ggcggcggcggctcc**	ggtggtggtggatcc	CAGGTTACTCTRAAAGWGTSTG		8	5
HB17	**ggcggcggcggctcc**	ggtggtggtggatcc	CAGGTCCAACTVCAGCARCC		6	3.5
HB18	**ggcggcggcggctcc**	ggtggtggtggatcc	GATGTGAACTTGGAAGTGTC		1	0.7
HB19	**ggcggcggcggctcc**	ggtggtggtggatcc	GAGGTGAAGGTCATCGAGTC		1	0.7

Primer VH for:

	5′ *Eco*RI	3′
scfor	ggaattcggccc**ccg**ag	

	5′ *Eco*RI	*Sfi*I	V_H	3′	
HF1	ggaattcggcc	**ccg**aggc	CGAGGAAACGGTGACCGTGGT		1
HF2	ggaattcggcc	**ccg**aggc	CGAGGAGACTGTGAGAGTGGT		1
HF3	ggaattcggcc	**ccg**aggc	CGCAGAGACAGTGACCAGAGT		1
HF4	ggaattcggcc	**ccg**aggc	CGAGGAGACGGTGACTGAGGT		1

Specific primers for c-DNA synthesis:

CLκ	ACTGGATGGTGG
CLλ	ACTCTTCTCCACA
IgA	GGTGGTTATATCC
IgM	CTGATACCCTGG
IgG+E	RCTGGACAGGG

Primer VL back:

	5′	*Sfi*I	*FLAG* 3′
scback	ttactcgcggccc**agc**cggccatggcggactacaaaG		

	5′	*FLAG*	V_L	3′	(d)	µl Mix
LB1	gccatggcg	*gactacaaaGAY*	ATCCAGCTGACTCAGCC		2	1
LB2	gccatggcg	*gactacaaaGAY*	ATTGTTCTCWCCCAGTC		4	2
LB3	gccatggcg	*gactacaaaGAY*	ATTGTGMTMACTCAGTC		12	5
LB4	gccatggcg	*gactacaaaGAY*	ATTGTGYTRACACAGTC		8	3.5
LB5	gccatggcg	*gactacaaaGAY*	ATTGTRATGACMCAGTC		8	4
LB6	gccatggcg	*gactacaaaGAY*	ATTMAGATRAMCCAGTC		16	7

Table 1. Continued

LB7	gccatggcg*gactacaaaGAY*ATTCAGATGAYDCAGTC	12	6
LB8	gccatggcg*gactacaaaGAY*ATYCAGATGACACAGAC	4	1.5
LB9	gccatggcg*gactacaaaGAY*ATTGTTCTCAWCCAGTC	4	2
LB10	gccatggcg*gactacaaaGAY*ATTGWGCTSACCCAATC	8	3.5
LB11	gccatggcg*gactacaaaGAY*ATTSTRATGACCCARTC	16	8
LB12	gccatggcg*gactacaaaGAYR*TTKTGATGACCCARAC	24	8
LB13	gccatggcg*gactacaaaGAY*ATTGTGATGACBCAGKC	12	6
LB14	gccatggcg*gactacaaaGAY*ATTGTGATAACYCAGGA	4	2
LB15	gccatggcg*gactacaaaGAY*ATTGTGATGACCCAGWT	4	2
LB16	gccatggcg*gactacaaaGAY*ATTGTGATGACACAACC	2	1
LB17	*gcc*atggcg*gactacaaaGAY*ATTTTGCTGACTCAGTC	2	1
λB	gccatggcg*gactacaaaGAT*GCTGTTGTACTCAGGAATC	1	1

Primer VL for:

	5′ (Gly_4Ser)-linker		V_L kappa 3′	
LF1	**ggagccgccgccgcc**	$(agaaccaccaccacc)_2$	ACGTTTGATTTCCAGCTTGG	1
LF2	**ggagccgccgccgcc**	$(agaaccaccaccacc)_2$	ACGTTTTATTTCCAGCTTGG	1
LF4	**ggagccgccgccgcc**	$(agaaccaccaccacc)_2$	ACGTTTTATTTCCAACTTTG	1
LF5	**ggagccgccgccgcc**	$(agaaccaccaccacc)_2$	ACGTTTCAGCTCCAGCTTGG	1
			V_L lambda	
λF	**ggagccgccgccgcc**	$(agaaccaccaccacc)_2$	ACCTAGGACAGTCAGTTTGG	0.25

In this nomenclature, 'back' refers to 'toward the 3′ end of the gene' and 'for' to 'toward the 5′ end of the antibody gene'. The sequences are given using the IUPAC nomenclature of mixed bases (shown in underlined capital letters), with a column listing the degeneracy encoded in each primer and the volume (microlitres) to be used to set up the PCR mix (*see Protocol 1*).

The LB1–LB17 series encodes a length of 20 bases complementary to the mature mouse antibody κ coding sequence (in capital letters). Underlined is the preceding sequence which encodes the shortened FLAG sequence (14). Since the FLAG uses the N-terminal Asp of the mature antibody (encoded by GAY, in italics), only three additional amino acids are necessary. The FLAG codons are then preceded by the codons specifying the end of the signal sequence. The λB primer for mouse lambda chains is constructed analogously.

The 'V_L-for' primers hybridize with the J-elements (capital letters) and encode three repeats of the Gly_4Ser sequence, the terminal one of which has a very different codon usage so that wrong overlap is minimized.

The 'V_H-back' primers encode the other part of the linker, overlapping with 'V_L-for' in the sequence shown in bold. The hybridization is within the region given in capital letters.

The 'V_H-for' primers hybridize within the J_H region.

The final assembly of the scFv gene is carried out with scback and scfor as described in *Protocol 1*.

K = T, G; R = A, G; M = A, C; B = C, G, T; S = G, C; Y = T, C; V = A, C, G; W = A, T.

General comments on primary PCR and assembly (Protocol 1)

Protocol 1 has the following features, which we believe to be significant improvements:

(a) The scFv fragment is assembled from only two pieces, not three. Therefore, only two fragments have to be matched in concentration.

(b) The linker is usually chosen to be 20 amino acids long for V_L–linker–V_H assemblies, to avoid dimerization or aggregation of scFv fragments (7–10).

(c) To avoid any wrong overlap during assembly PCR, the (Gly_4Ser) repeats are encoded by different codons.

(d) Polymerases with proof-reading capacity are used whenever possible.

(e) The set of mouse primers (*Table 1*) has been optimized, incorporating all presently known mouse sequences and combining previous primer sets (11–13).

(f) The scFv encodes a convenient shortened version of the FLAG peptide, which introduces only three additional amino acids at the N-terminus (14). This way, the scFv can be detected in any fusion protein.

(g) *Sfi*I is used as the universal cloning site for directional cloning. The enzyme *Sfi*I has a number of remarkable advantages. It recognizes eight bases, interrupted by five non-recognized nucleotides (GGCC-NNNNNGGCC), and sites are therefore very rare. By choosing two *different* sticky ends, directional cloning is possible. Furthermore, avoiding symmetry in the sticky ends, self-dimerization of either insert or vector becomes impossible. Finally, *Sfi*I has the interesting property that it always cuts two sites at once, and therefore single-cut plasmids do not occur as intermediates (cutting plasmids with single *Sfi*I sites requires two plasmid molecules) (15).

(h) To further test and improve ligation efficiency, the recipient vector is used with a tetracycline resistance (2101 bp) cassette between the two different *Sfi*I sites. The loss of *tet* resistance can easily monitor the successful cutting and ligation.

(i) The procedure has been successfully used for library cloning, e.g. from immunized mice in an analogous way.

(j) The procedure as detailed here describes the assembly of an scFv fragment via PCR cloning into the two different *Sfi*I sites. Since compatible vector sets are available for expression as soluble fragments or for phage display (16), the procedure can be carried out identically in both cases.

(k) Compatible vector sets are available which allow conversion of the scFv fragment to any fragment shown in *Figure 1*. This is described in more detail in Ge *et al.* (16). It may be advantageous to carry out a preliminary characterization of the candidate antibodies in the scFv format, as this is fairly general.

(l) Vector features are listed in Section 3.2.1.

(m) Using gene synthesis, e.g. by the PCR-based method of Prodromou and Pearl (6), one or both domains can be synthesized completely. The procedure can then be followed from *Protocol 1C*. As indicated in the text, the quality of each of the oligonucleotides is most decisive. Since the PCR-based method randomly amplifies single molecules, single-base deletions present in any one of the oligonucleotides can be amplified into the final product. While the 'capping' used in the usual oligonucleotide synthesis protocol (17) tries to minimize this problem, it can never be eliminated completely. For such projects we recommend that the

oligonucleotide supplier is carefully chosen and that documentation on stepwise yields for each oligonucleotide is requested. A low total yield is usually a warning sign that the 'full-length' oligonucleotide pool contains a significant proportion of molecules with random single-base deletions. Gel purification can ameliorate, but not solve, the basic problem, which lies in poor synthesis quality.

(n) Similar precautions are appropriate in primer synthesis for library projects. The use of mixed bases in particular, poses a problem for some oligonucleotide suppliers. Bottle changes on the synthesizer may introduce moisture in the system, leading to lower overall yields, with concomitant base deletions. Any sequence absent from a complex primer mixture will obviously decrease the functional library size. Thus, for complex library projects, the oligonucleotide supplier should be chosen with care.

2.1 Choice of antibody format

An important question for any expression project is which format the antibodies are to be expressed in. A similar question can of course also be posed in the design of a phage library. Since the conversion from one format into the other is straightforward, one need not be constrained by the availability of a particular library.

The antibody structure is separated into an antigen-binding part (the Fab fragment) and into an effector part (the Fc fragment), connected by a hinge region (Chapter 9, ref. 18). There is no evidence, to the best of our knowledge, that these two parts interact with each other in the final IgG molecule or during the folding. Therefore, the recombinant Fab fragment is most likely a precise replica of the same Fab fragment in the context of the whole antibody. The only exception is that some subclasses of antibodies are glycosylated in the C_H1 domain (18), and occasionally, CDRs code for an adventitious glycosylation site, usually unwanted anyway, which of course will not be reproduced by bacterial hosts.

The Fab fragment has no effector function, and any desired biological function of the recombinant antibody, other than antigen recognition, must therefore be engineered into it—most advantageously in the form of fusion proteins. The type of partners which can be fused is limited only by imagination, as enzymes, cytokines, metal binding domains, and receptor ligands have all been used, fused to either Fab or single-chain Fv fragments (see below) (1, 19, 20). The glycosylation of the Fc part is necessary for its function, both in complement activation as well as in antibody-dependent cellular cytotoxicity (ADCC) (21), and so the expression of whole antibodies in *E. coli* would not be useful for biological function, even if they were expressed with significant yields (22). For the second function of the Fc part, namely to provide bivalency, there are simpler solutions which have been shown to work well in *E. coli* (see below).

For *E. coli* (2), the choice is therefore between Fab fragments and Fv fragments and their derivatives (single-chain Fv fragments (scFv) (23–25) and disulfide-linked Fv fragments (dsFv) (see *Figure 1*)) (25–27). All other fragments (single domains, CDR peptides) are not faithful representations of the original antibody-binding site and therefore of interest only in special situations and will not be discussed further.

Fab fragments make use of the natural stabilizing effect of the constant domains C_H1 and C_L. These constant domains not only increase the size of the interface between the light and the heavy chains, but also protect the interface at the 'bottom' of the Fv fragment against partial denaturation and aggregation. Another advantage is the non-covalent tight association of the two chains, leading to a more facile combinatorial approach to libraries (3). However, there is a price to be paid. In a number of examples, the corresponding Fab fragment was expressed at lower levels than the Fv or scFv fragment because of increased folding problems (2). Apparently problems with aggregation-prone intermediates become exacerbated when these are coupled to another domain, such as the constant domains. Fab fragments may thus be thermodynamically favoured, but kinetically (during folding) disfavoured, compared to Fv derivatives. This observation is not general, however, as some Fv or scFv can be proteolytically labile, such that the achievable levels of functional protein for the Fab fragment could be similar or even better. While folding mutations found to improve Fv fragment folding (see Section 4) (28) were also found to improve Fab fragment folding, all Fabs remained at a lower level than the Fv derivatives in these experiments.

The Fv fragment is only part of a natural protein assembly. It has not been optimized by evolution to stay associated as a V_L–V_H heterodimer, since normally, the constant domains help in achieving this. Therefore, it is not surprising to find a large variation in the stability of domain association, since the hypervariable loops contribute a significant part to the V_H/V_L domain interface (18). Because of this, as yet, unpredictable association behaviour, pure Fv fragments are only rarely used.

Most popular has been a variant of the Fv fragment, in which the two chains are coupled genetically to give the so-called single-chain Fv (scFv) fragment (23–25). This can be done in two orientations, V_H–linker–V_L or V_L–linker–V_H. The large number of antibodies converted to these formats allow us to make some comments about the properties of such molecules. While the antibody has an approximate pseudo two-fold molecular axis of symmetry, the distance between the C-terminus of V_L and the N-terminus of V_H is around 39–43 Å (29, 30), while the distance between the C-terminus of V_H and the N-terminus of V_L is around 32–34 Å (29, 30). To obtain similar molecular properties, a V_L–V_H linker must obviously be longer than a V_H–V_L linker.

If the linker is too short, the molecule prefers to dimerize or multimerize: one V_H domain of one scFv pairs with a V_L domain of a different scFv

molecule. This behaviour has been investigated as a function of linker length (7, 8). Since several sites often remain functional in such oligomers, some avidity effects can be observed, although this is somewhat unpredictable and depends on the primary sequence of the antibody (7–9). The 'miniantibody' format (31–33) shown in *Figure 1* may be a more general solution to this problem. While these molecules have minimal oligomerization domains, many alternative fusions, which lead to dimers or multimers, are of course conceivable and some have been made in the laboratory. This phenomenon of scFv aggregation has also been exploited for constructing heterodimers ('diabodies') (10). It appears that a 15–20 amino acid linker is usually appropriate for obtaining largely monomeric V_H–linker–V_L molecules.

We recommend, therefore, the use of 15 or 20 amino acid linkers in the orientation V_H–linker–V_L and 20 to 25 amino acid linkers in the orientation V_L–linker–V_H. The latter orientation has advantages because of the ease with which a minimal FLAG-tag of only three extra amino acids can be added for detection (14, see below). These design principles should also be used in creating phage libraries, and if a linker of repeating sequences is used, e.g. the $(Gly_4Ser)_n$ repeats, the similarity of the DNA sequences between the repeats has to be minimized to avoid deletions through recombination or during PCR assembly (16).

The advantage of the scFv strategy is that it secures an equimolar mixture of V_H and V_L, and makes the V_H–V_L association concentration independent, but it keeps V_H and V_L in a rather loose (and possibly mobile) complex. Another method for obtaining covalent linkage of V_L and V_H is by designing disulfide bonds between them (25–27). Framework positions have been identified which will be useful for many antibodies, although probably not for all, because of the variability in relative orientation of V_H and V_L. There may not be a single solution to a globally stabilizing disulfide bond, but a number of bonds are generally promising. In direct comparisons (25), the functional expression of disulfide-containing Fv fragments was lower than the same fragment without the disulfide bond or the scFv fragment, but this disadvantage may be offset by ending up with a very stable molecule (25–27).

Future approaches will most likely combine several of these strategies, and also incorporate mutations useful for minimizing aggregation problems.

3. Expression strategies

3.1 Overview

In general, one strives to produce a protein in the native state. The only case when alternative expression methods can become attractive, is if the native expression does not yield sufficient material. We stress again that, all other things being properly designed, the primary sequence of the antibody is a most decisive factor (28). We will analyse potential reasons for this, provide possible solutions to some problems, and compare alternative techniques.

All antibody expression strategies have to take account of the fact that a crucial intramolecular disulfide bond stabilizes each of the immunoglobulin domains (1, 2, 34). This disulfide must be present in the final product, and it must be formed either by making use of the periplasmic disulfide-forming machinery or during *in vitro* folding, with thiol/disulfide couples catalysing disulfide bond formation. We will first present an overview of the four basic antibody production techniques in *E. coli* (*Figure 2*), before discussing the two native strategies in more detail.

The first strategy (35, 36) consists of secreting the recombinant antibody to the periplasm. Today we know that this allows use to be made of the periplasmic disulfide-forming machinery of DsbA, DsbB, and DsbC and possibly other factors (37). Using this strategy, all monovalent and multivalent types of antibodies in *Figure 1* have been successfully expressed (reviewed in refs 1, 2). The main attraction is the ease of handling and the direct compatibility with the phage display format (3). Using high cell-density fermentation (see Section 5.3), yields of up to several grams per litre of functional antibody can be obtained, at least for antibodies with a reasonable folding behaviour. The disadvantage of this strategy is, however, that some particular antibody sequences can give relatively poor folding yields, whose molecular causes are only starting to be unravelled (see Section 4). Furthermore, some antibodies show sensitivity to proteases.

The second strategy is a direct companion of the first. It is to isolate the insoluble, periplasmic material (which has failed to fold or has even been deliberately accumulated, by carrying out antibody secretion at high temperature with strong promoters). This material must be refolded *in vitro* (38–40).

The third strategy is to express the antibody fragment without a signal sequence in the cytoplasm of special strains so that disulfide bonds can be formed there (41, 42). This strategy is only possible with *E. coli* strains, which have been made deficient in thioredoxin reductase (TrxB).

The fourth strategy is finally to produce cytoplasmic inclusion bodies (16, 29, 30, 43, 44). Antibody inclusion bodies are not fundamentally different from any other inclusion bodies and, thus, many guidelines from general inclusion body production can be followed (45). As in the second strategy, the crucial step is high-yield refolding *in vitro*.

An important trend which we have observed in a number of well-studied examples is a strong correlation between the *in vitro* and *in vivo* folding behaviour. This means that the same molecules which gave poor *in vivo* folding yields also lead to most of the aggregation by-products *in vitro*. Therefore, it appears that re-engineering the molecules for improved folding may be useful for *any* expression strategy.

While this chapter concentrates on native expression of antibody fragments, detailed protocols to refold antibodies from inclusion bodies have been given elsewhere (16, 29, 30, 43, 44). It should be emphasized that some

empirical optimization of the refolding procedure will be necessary, because of the individuality of antibody fragments. General considerations are given in references 16, 29, 30, 45.

3.2 Secretion

The secretion of proteins to the periplasm is a natural process in *E. coli* (46), whose dependence on a signal sequence is well known. Much less understood are the requirements on the mature protein. Different signal sequences, by having different nucleotide sequences, may affect the translation initiation, and thus the rate of protein translation and transport, ultimately influencing the aggregation process accompanying protein folding. The choice of signal sequence is mostly governed by technical issues such as the ease with which rare 8-base restriction sites can be engineered into the sequence without disturbing its function. The *pelB* signal (from *Erwinia cavotovora* pectate lyase) has been found to be useful in this respect by a number of investigators, and because of its somewhat poorer translation initiation (probably related to the nucleotide sequence following the start codon) (A. Krebber, unpublished) may be particularly advantageous for phage display. In comparison, the signal from the *E. coli* outer membrane protein A (*ompA*) appears to be translated more efficiently and thus may be better suited for expression vectors than phage display. The weaker expression of *pelB* signals can be overcome by using optimized upstream regions, as we have done in new generation vectors (see below).

While the periplasm contains the machinery to form disulfides, no general periplasmic chaperone has been identified up to now (47). Thus, the recombinant proteins may be more or less 'on their own', and may have to be engineered for efficient folding (see Section 4). Several periplasmic proteases have been discovered (47, 48), but it is not clear whether there may be more, and the various available multiple deletion strains (48) have not been thoroughly evaluated at the time of writing. It should be pointed out, however, that the degradation is frequently a *symptom* (being a consequence of poor folding, since misfolded material gets degraded) and not a *cause* of poor expression (49).

3.2.1 Secretion vectors

Why is it necessary to give any thought to this topic at all, when so many vectors for the production of a multitude of different proteins have been described? The main reason is the stress imposed on *E. coli* by secreting the antibody. As discussed elsewhere in more detail, the cell attempts to minimize the stress by getting rid of the plasmid, or in severe cases by eliminating the genes by plasmid rearrangement or mutations. It is the residual expression of the protein which causes all the problems and must be carefully controlled to just the right level. This makes it immediately clear why different antibodies may have different requirements for the level of background expression they

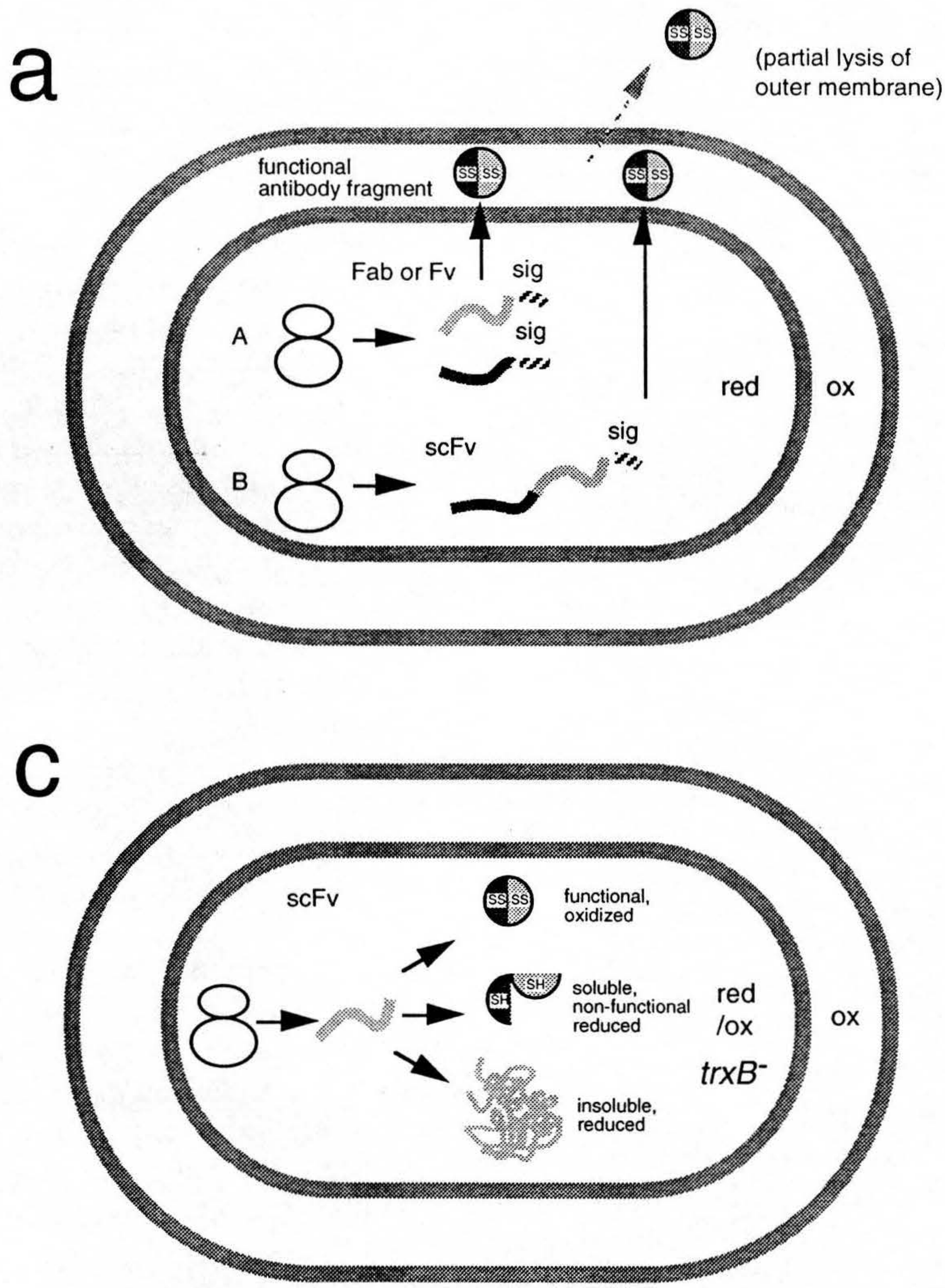

Figure 2. Expression strategies for antibody fragments in *E. coli.* (a) Expression by secretion. This has been demonstrated for all the fragments in *Figure 1,* and is symbolized here for a two-chain fragment (Fv or Fab) (A) and a single-chain fragment (B). As discussed in the text, this strategy can lead to very high amounts of functional protein and is compatible with the fermentation conditions in Section 5. The side reactions are insoluble periplasmic protein (see (b)) and a leakiness of the outer membrane, which depends on the growth conditions and the primary sequence of the antibody. (b) Expression as insoluble periplasmic protein with subsequent *in vitro* refolding. This strategy is an attempt to rescue the protein unable to fold in strategy (a). To maximize

can tolerate. The design of the expression vector must therefore optimize the vector stability, minimize the promoter leak-rate, and optimize (not maximize) the expression level in the induced state.

We will discuss the problem using the example of *lac*-promoter based plas-

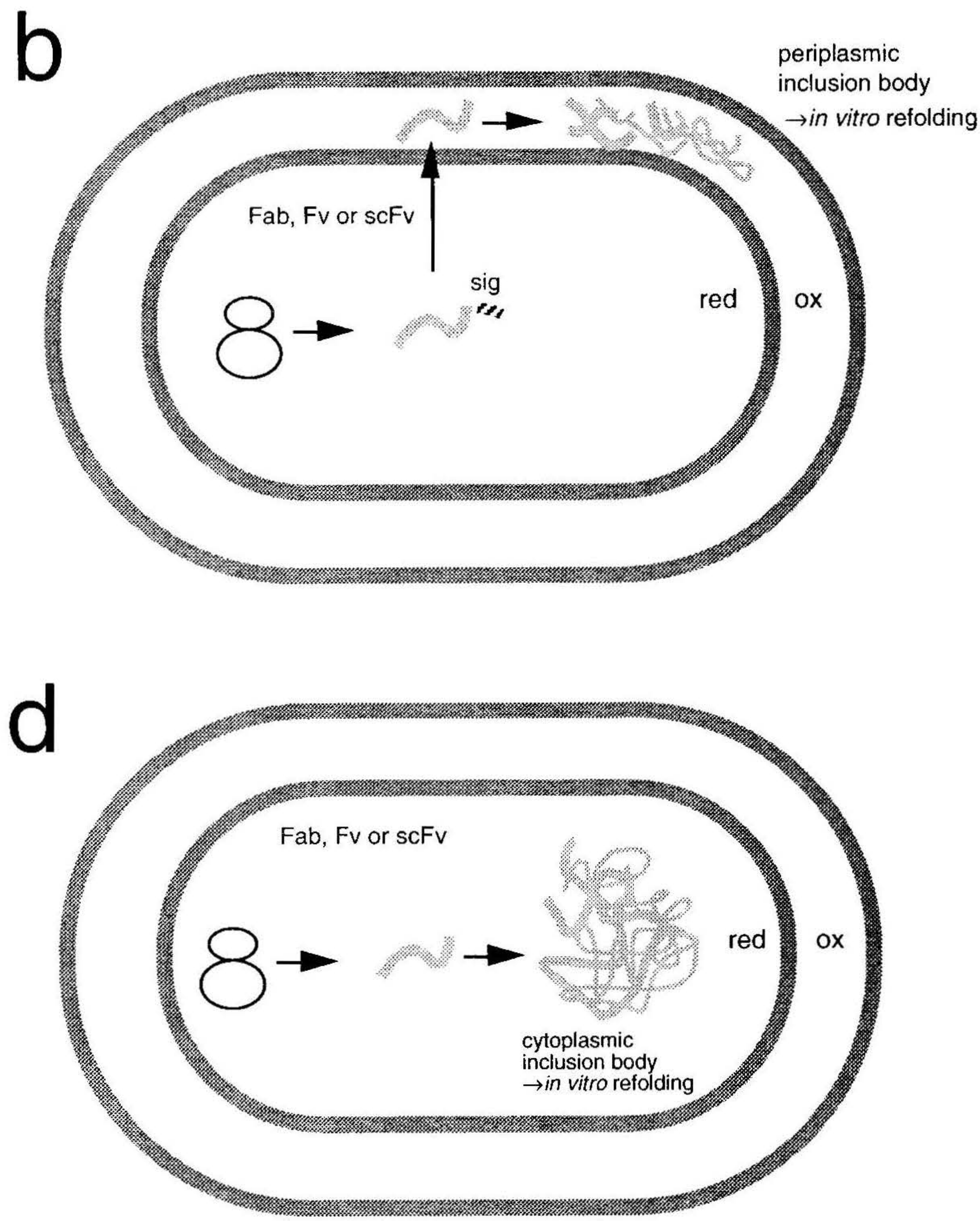

the yield, this strategy is usually carried out at high temperatures, since aggregation is desired. (c) Functional expression in the cytoplasm. This is only possible under conditions where disulfide formation is favoured, such as in *trxB*⁻ strains. The antibody fragment is partitioning between an insoluble and, of course, non-functional form, a reduced, soluble but non-functional form, and the correctly oxidized and functional form. The *trxB*⁻ mutation increases the percentage of the latter form, but not of the soluble, non-functional form. (d) Expression as cytoplasmic inclusion bodies with subsequent *in vitro* refolding. To maximize the yield, this strategy is usually carried out at high temperatures, since aggregation is desired.

mids, although other promoters have also been used successfully (1). Any system can be used which adheres to the following rules. The expression system has to be inducible at room temperature. The stress on the host cell (indirectly linked to incorrectly folded and aggregated antibody protein)

greatly increases at higher temperature. Thus, the optimal expression temperature is around 26°C. While one can use temperature inducible systems (involving a brief shift to 42°C), this appears to still give more aggregation than keeping the cells at 26°C continuously (50). In the fermenter, the temperature jumps upset the balance of the cells, and are not advantageous. Thus, a chemical inducer is preferred together with a plasmid-encoded repressor. The system with *lac*I as the repressor gene, IPTG as the inducer, and the *lac* operator fulfils this need. Undoubtedly, other similar systems can be used in an analogous fashion.

Most important is the tight control of the promoter/operator system. The 'leakage' of expression is responsible for all the unfavourable effects such as periplasmic leakage, plasmid loss, and rearrangement, because of the relatively long time cells spend in pre-cultures, or the main culture before induction. In the *lac*-based system, arranged precisely as in the natural *lac* operon, two sources for background expression exist. The first is a read-through from the *lac*I repressor gene, upstream of the promoter, which becomes *worse* when its promoter strength is increased (the *lac*I^q variant) indicating that it is not the amount of repressor protein which is limiting, but that the *lac*I message continues into the antibody gene (A. Krebber, C. Wülfing and A. Plückthun, unpublished; see also ref. 51). Consequently, a strong terminator upstream of the *lac* promoter is essential for tight repression. The second source of background expression is leakage of the promoter itself. This is most efficiently minimized by the presence of the natural CAP site (52), leading to glucose repression.

In general, the promoter must have a 'window' as wide as possible (defined as the ratio of induced over non-induced transcription) (53). The more toxic the product is, the more advantageous it becomes to lower both the non-induced as well as the induced levels by factors which affect both levels equally: promoter strength and translation initiation. Since for such toxic protein products, only a fraction of the protein may fold correctly anyway, a high expression level is not that crucial. From a more pragmatic point of view, there may never be a universal vector, but, using a terminator upstream of the promoter in all cases, several strength variants of the promoter (e.g. *lac, lacUV5, tac*) combined with inducer titration can be an easy solution for elucidating the optimal levels for a given protein (*Figure 3*).

We believe that for phage display, a strong promoter is of no importance and actually a burden. In contrast, given the enormous stress fusion proteins of antibodies with *gene3* impose on the cell, a low background level before induction is of utmost importance, or losses of clones from the library or gene deletions will quickly accumulate. Thus, phage display and soluble expression have rather different optima, the latter requiring much stronger transcription and translation. Thus the use of phage-display vectors for soluble expression, e.g. making use of a suppressible stop codon in the antibody–*gene3* fusion protein, can be used for characterization but not for efficient production.

The antibody cassette should be modular in nature. One solution is given in the pAK and compatible pIG series (16) of vectors (*Figure 3*). This way, the initial product can easily be converted into a number of fusion proteins or miniantibody formats (16) (*Figure 4*). In the new vectors, the PCR product can be cut with only one enzyme, an 8-base cutter (*Sfi*I), which because of its unspecified three nucleotides in the overlap, allows directional cloning, if both sites are different. This enzyme has the interesting property that it only makes double-cuts in the plasmid, thus further facilitating library cloning (15) (see *Protocol 1* and note g (p. 212)).

Particularly important are tag sequences to follow and purify the antibody conveniently. We prefer to have a shortened FLAG (14) requiring only three extra amino acids when put in front of the light chain, or four on the heavy chain. Purification can be carried out with FLAG sequences, using an anti-FLAG column, but is most conveniently carried out with the histidine tag (54) in combination with immobilized metal ion affinity chromatography (IMAC) (see below). The his tag can be detected by an antibody (P. Lindner, unpublished), or it can be preceded by another tag, the myc tag (55).

Such insertion cassettes also allow fusion to other protein domains. We have used dimerization and tetramerization devices to obtain dimeric or multimeric antibodies conveniently with these vectors (31–33). These devices are amphiphathic helices, linked to an scFv fragment via a flexible hinge (*Figure 1*). For easy purification, a his-tail can be attached as well. For convenience, *gene3* cassettes are also available to make phage-display vectors and expression vectors compatible (16).

Outside of the expression cassette, the vector must code for an antibiotic resistance. In phage display, the expression of the antibiotic resistance gene must not be too high, or low phage titre will be observed, perhaps because of interference between the single-strand production and transcription. Chloramphenicol (Cam) and ampicillin (Amp) resistance are satisfactory, while kanamycin (Kan) resistance appears to give somewhat lower phage titres in a direct comparison of w.t. phages (S. Spada, C. Krebber, and A. Plückthun, unpublished). In fermentation, antibiotics, notably ampicillin, are quickly degraded by enzymes from lysed cells so that plasmid maintenance is not possible by antibiotics alone. Thus, additional so-called post-segregational killing mechanisms such as the *hok/sok* system (56) have been employed by us.

If it is to be used for phage display and/or site-directed mutagenesis, the plasmid needs an f1-origin of replication (57). To replicate as a double-stranded plasmid, the plasmid also needs another origin, usually derived from *ColE1*. The pUC-derived variant is temperature sensitive: it has a low copy number (lower than pBR322) at room temperature and a high copy number at 37°C (58).

3.3 Functional antibodies from the cytoplasm

The *E. coli* cytoplasm is 'reducing', which means that under normal circumstances the equilibrium between reduced and oxidized cysteine is on the

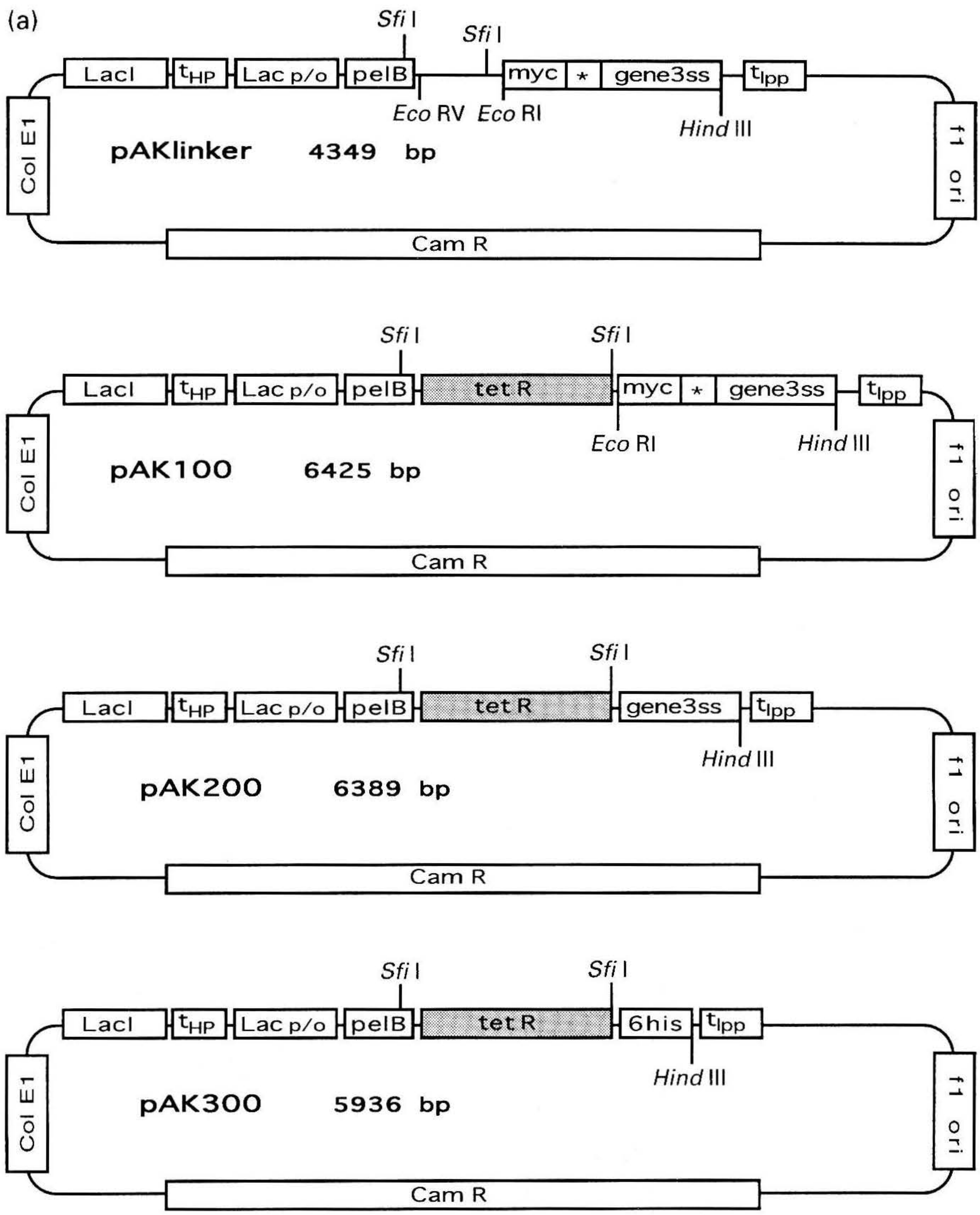
(a)
Sfi I
Sfi I
LacI
tHP
Lac p/o
pelB
myc
*
gene3ss
tlpp
Eco RV
Eco RI
Hind III
Col E1
pAKlinker 4349 bp
f1 ori
Cam R
Sfi I
Sfi I
LacI
tHP
Lac p/o
pelB
tet R
myc
*
gene3ss
tlpp
Eco RI
Hind III
Col E1
pAK100 6425 bp
f1 ori
Cam R
Sfi I
Sfi I
LacI
tHP
Lac p/o
pelB
tet R
gene3ss
tlpp
Hind III
Col E1
pAK200 6389 bp
f1 ori
Cam R
Sfi I
Sfi I
LacI
tHP
Lac p/o
pelB
tet R
6his
tlpp
Hind III
Col E1
pAK300 5936 bp
f1 ori
Cam R
Sfi I
Sfi I
FLAG
VL
VH
DYKD
(G4S)4

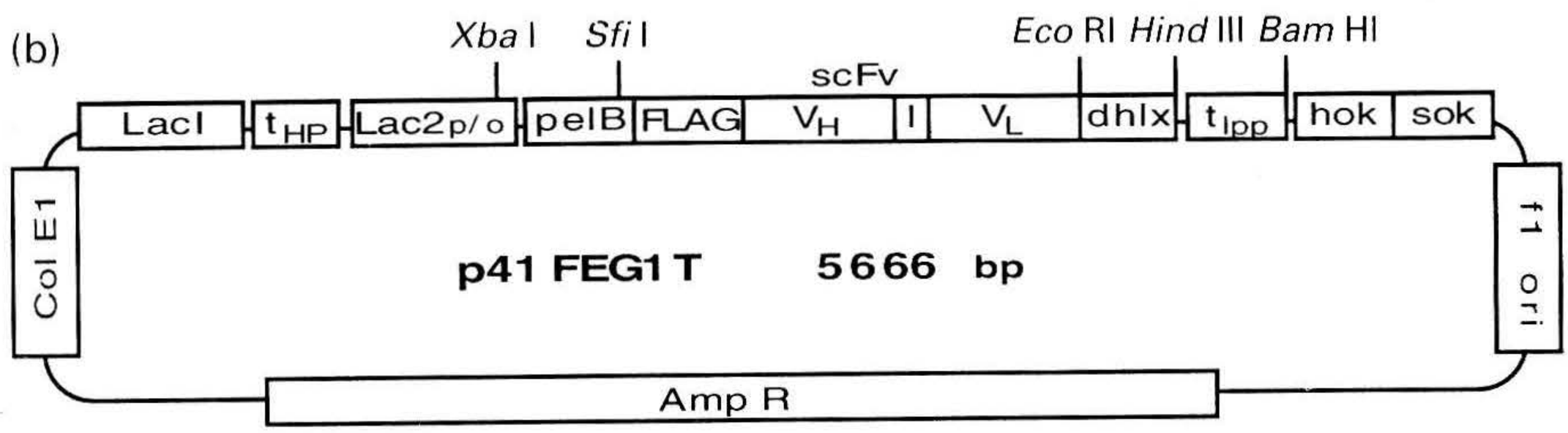

Figure 3. Vectors and cloning strategies. (a) Vectors useful for the initial cloning of antibody fragments using the strategy outlined in *Protocol 1* (A. Krebber and A. Plückthun, unpublished). The vectors pAK100, pAK200, and pAK300 contain a *tet* resistance cassette (*tetA* and *tetR*; 2101 bp, shaded) to facilitate the monitoring of *Sfi*I cutting, both by gel electrophoresis and by religating and subsequent plating on tetracyline plates. Note that both *Sfi*I sites are different (see text), indicated by the different shadings of the sticky ends at the scFv insert at the bottom. The pAKlinker vector only contains a short DNA linker. The expression cassette is shown on the top of each vector. It comprises the *lacI* repressor gene, a strong terminator, t_{HP} (51), the *lac* promoter/operator, and the *pelB* leader sequence, which has been modified to contain an *Sfi*I site. After ligation, the antibody fragment is fused in-frame to *gene3* (pAKlinker, pAK100, pAK200) or to a his-tail for purification (pAK300) (54). The in-frame fusion using pAK100 to *gene3* first leads into a myc-tag (55) as a detection handle, in addition to the short 3-amino acid FLAG at the N-terminus (14). The asterisk represents an amber codon. Depending on the strain used it is possible to switch between soluble expression of scFvs (by using non-suppressor strains like JM83) and expression of scFv *gene3* fusions (by using suppressor strains like XL1). The *gene3* portion (denoted ss for super-short) starts at position 250 in the precursor protein, thus avoiding extraordinarily long glycine linkers and, most importantly, any unpaired cysteine of g3p. The two origins for phage replication and plasmid replication are as usual (details in ref. 16).

All fusion partners, including the helices for multimerization shown in *Figure 1*, can be added as *Eco*RI–*Hin*dIII fragments in pAKlinker or pAK100 (for details see ref. 16).

The chloramphenicol cassette (*Cam R*) is originally derived from pACYC184, but its expression strength has been adapted by randomizing the promoter and selecting clones with optimal growth and selection properties (C. Krebber and A. Plückthun, unpublished).

(b) Example for a high-level expression derivative of the pAK-vectors as used in high cell-density fermentation (see Section 5) (U. Horn, A. Krebber, D. Reisenberg, and A. Plückthun, unpublished). The vectors use a much stronger upstream region (denoted as *lac2 p/o* derived from a T7 upstream region), a different resistance (which is of no importance other than for transformation, since the selective pressure is not sufficient anyway for plasmid maintenance), and as a post-segregational killing mechanism, the *hok/sok* system (56). The particular example shown is that of a miniantibody.

(c) Two-step assembly strategy of scFv fragments as detailed in *Protocol 1*. The primer mixes are found in *Table 1*.

See Figure 3c over page.

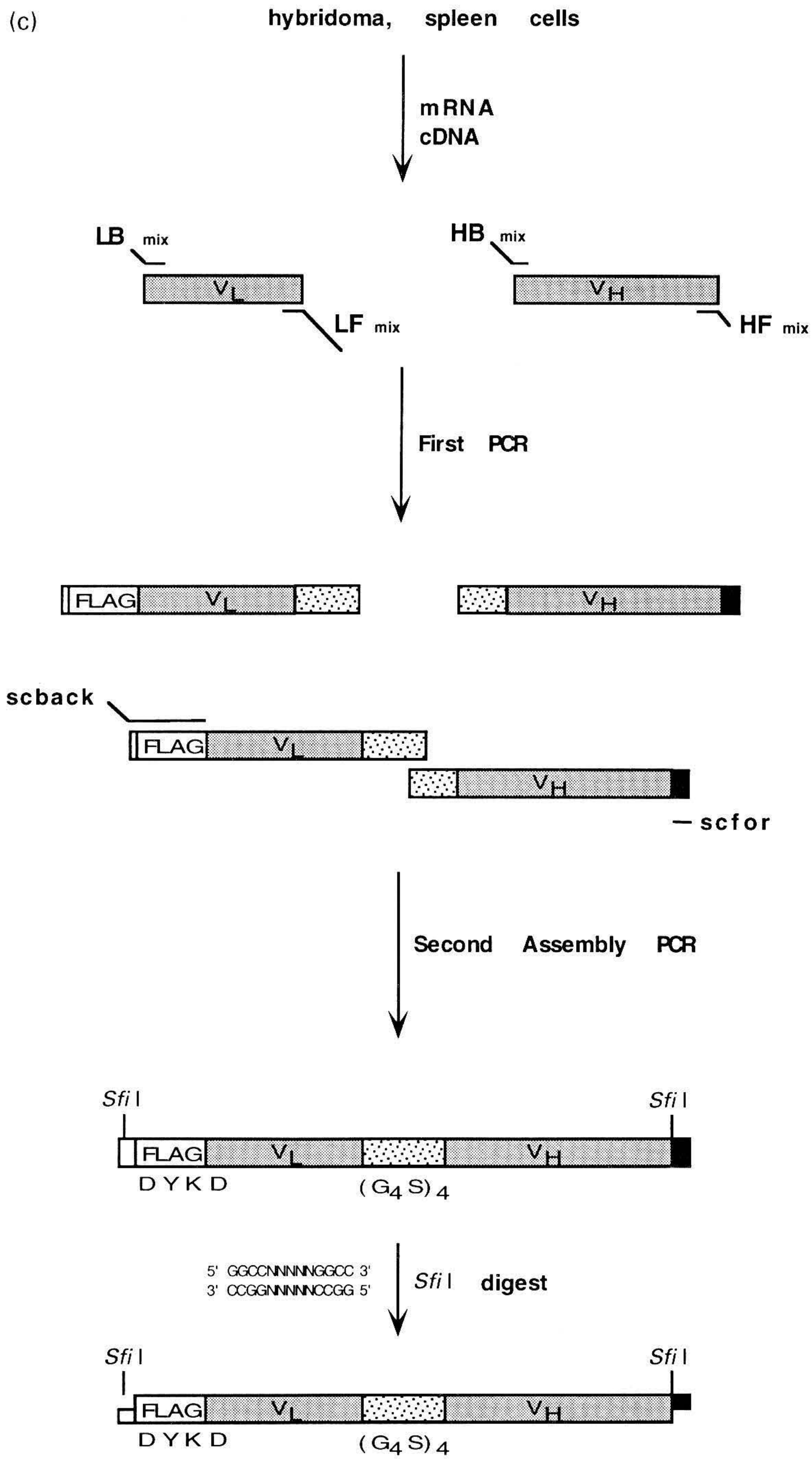
(c)
hybridoma, spleen cells
mRNA
cDNA
LB mix
HB mix
VL
VH
LF mix
HF mix
First PCR
FLAG
VL
VH
scback
FLAG
VL
VH
— scfor
Second Assembly PCR
Sfi I
Sfi I
FLAG
VL
VH
DYKD
(G4S)4
5' GGCCNNNNNGGCC 3'
3' CCGGNNNNNCCGG 5'
Sfi I digest
Sfi I
Sfi I
FLAG
VL
VH
DYKD
(G4S)4

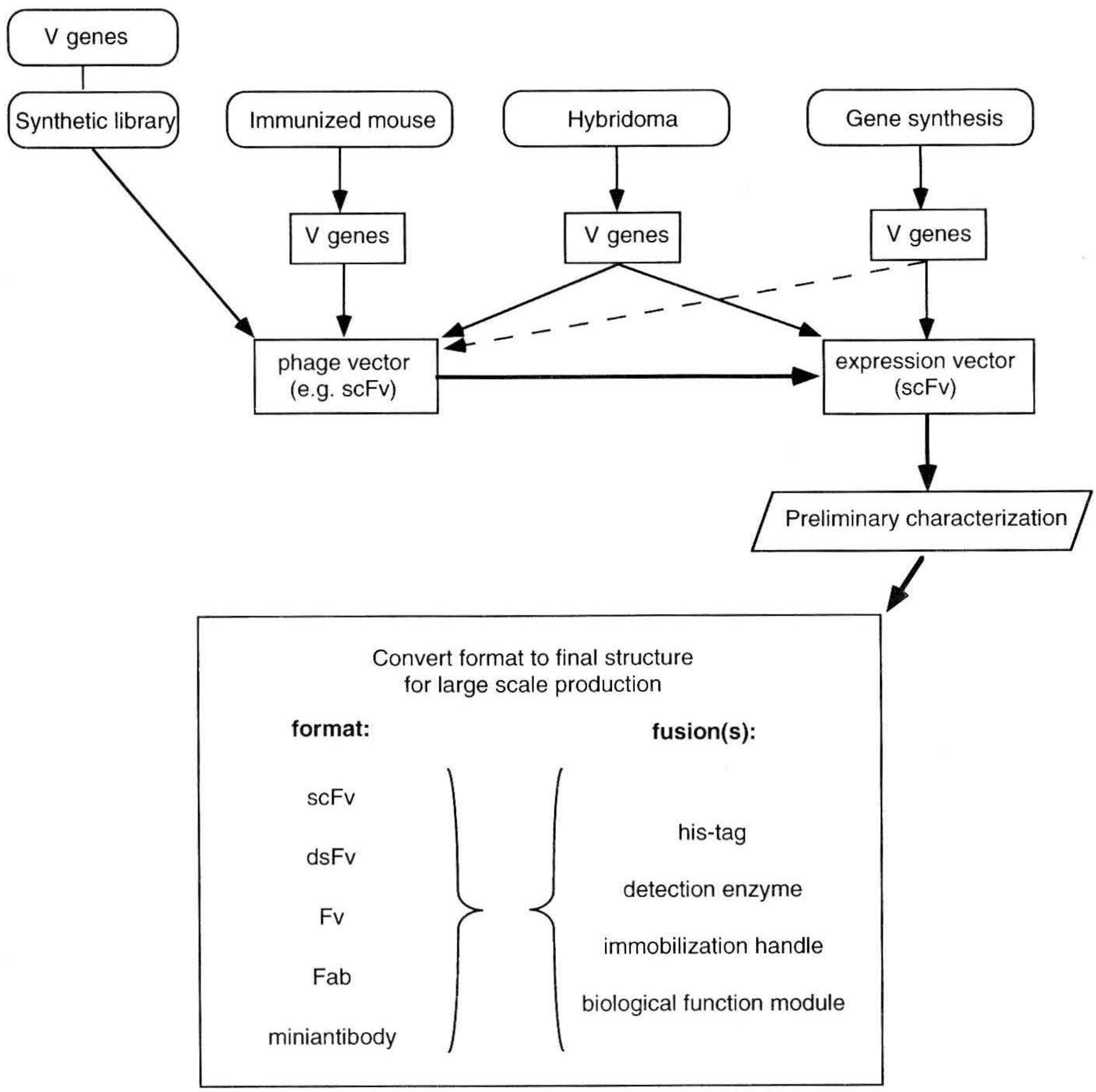

Figure 4. Schematic cloning, conversion, and expression strategies. Four different starting scenarios are shown, leading to the cloning of the V-genes in either a phage vector or directly into an expression vector. While not strictly required, it is often advantageous to have a streamlined strategy by first cloning an scFv fragment and then to convert the best candidate to the exact fragment and/or fusion protein desired. For details, see also ref. 16.

reduced side. In order for disulfide bonds to form, two conditions must be met: first the thermodynamic equilibrium must allow it, and second, there must be an efficient kinetic mechanism available to form disulfides, i.e. reagents with which the disulfides formation can be catalysed.

E. coli depends on reduced cysteines not only in a number of cytoplasmic enzymes, but also in some proteins such as thioredoxin (Trx) and glutaredoxin (Grx), which play a crucial role as co-factors in the biosynthesis of deoxyribose, cysteine, and the reduction of methionine sulfoxide back to methionine (59). To keep Trx and Grx reduced, NADPH is used by two different enzymes, thioredoxin reductase and glutathione reductase. If thiore-

doxin reductase (TrxB) activity is diminished, cytoplasmic disulfides can form (42), but the mechanism by which this occurs is presently still unclear. It is not known whether molecular oxygen acts directly as the oxidant, or whether oxidation exploits accumulating oxidized glutathione, or other factors.

Strains deficient in TrxB appear to grow normally under standard laboratory conditions, indicating that only a slight perturbation of the disulfide metabolism is taking place. It was found that significant amounts of functional scFv were only obtained in the presence of this *trxB*$^-$ mutation (41). The active scFv correlated with the amount of *oxidized* material detectable by gel electrophoresis, but *not* with the amount of soluble scFv, which was constant and higher than the active amount. This clearly shows that there is soluble, inactive (and probably reduced) scFv formed under these conditions, in addition to the soluble oxidized, active scFv. Increasing the promoter strength can dramatically increase the amount of soluble and insoluble scFv—but the amount of active, disulfide containing scFv does not seem to change. These results suggest that cytoplasmic oxidation is the limiting reaction for functional expression, at least under the experimental conditions tested (41).

The suitability of this strategy for fragments other than scFv and the influence of antibody folding mutants (see below), the effect of co-expression of cytoplasmic folding factors, and the influence of particular protease-deficient strains still remains to be thoroughly evaluated.

3.3.1 Vectors for cytoplasmic soluble expression

From the much more limited experience with cytoplasmic, functional expression in *trxB*$^-$ strains, it appears that there is much less stress imposed on the cells than in the periplasmic expression strategy. Thus, the tightness of the regulation does not appear to be so critical. Both a standard *lac p/o*-based system as well as a T7-based system (16, 41, 43) gave satisfactory results. For the T7-based system, a BL21(DE3) strain, containing the T7 polymerase gene in the chromosome (60) and the *trxB*$^-$ mutation, was constructed (41).

3.3.2 Vectors for cytoplasmic inclusion body formation

For the preparation of cytoplasmic inclusion bodies, the T7-based system is particulary useful. In this case, it is crucial to grow the cells at 37 °C, and not at lower temperature, for favouring inclusion body accumulation, and a normal *trxB*$^+$ w.t. strain harbouring the T7 polymerase gene can be used. For both strategies (Sections 3.3.1 and 3.3.2) the same vector can be used (16).

4. Improving expression: the influence of the sequence on expression and folding

4.1 Analysis and long-term solutions

The primary sequence of the antibody is emerging as a most decisive factor in determining the yield of functional protein and many anecdotal observations

have pointed in this direction. Two antibodies have been compared in the form of the Fv fragments, scFv fragments, and Fab fragments for soluble periplasmatic expression in *E. coli* (28) and a similar relative functional expression ratio was found for all formats. Thus the very high yield for one of the antibodies (61) was shown to be due to the fact that this particular antibody sequence gives practically no insoluble protein at all, even at 37 °C.

Clearly, it would be desirable to transfer these spurious favourable properties to *any* antibody. In a series of loop-grafting experiments, it was found (G. Wall, H. Bothmann, S. Jung, K. Bauer, A. Knappik, and A. Plückthun, unpublished) that these effects partially reside in the framework, partially in the CDR loops. It has been possible, based on sequence comparisons and analysis of point mutants, to engineer the antibody framework to achieve better folding antibodies (28). Although this has allowed an insight into the folding problem, the problem is far from being solved.

This mutational analysis has shown that there are two separable, but related phenomena, occurring in most antibody fragments, albeit to widely varying degrees. Upon secreting the antibody to the periplasm, the cells become leaky and eventually lyse. The exact mechanism remains unknown, but it does depend on external factors such as the medium. For instance, it does not happen in the fermentation discussed in Section 5. Furthermore, a significant portion of the protein may end up in insoluble protein, which has its signal precisely removed and thus must have seen signal peptidase. This is most likely a *periplasmic* aggregate. Both phenomena can be suppressed by *different* mutations, yet the mutations act synergistically and both may constitute folding mutations on the same folding pathway. An *in vitro* analysis has shown that the improved folding yield is also seen during the oxidative folding reaction *in vitro* under similar conditions as used preparatively for renaturation from inclusion bodies (28). This means that such mutations are also extremely useful if the ultimate production strategy is the refolding *in vitro*. It was also found that these mutations do not affect folding kinetics or thermodynamics but the aggregation reaction.

Unfortunately, our understanding has not yet advanced to the point where it is obvious how to improve routinely any given sequence other than to introduce any of the mutations so far found useful. Yet, a few points have emerged:

(a) The mutations found useful so far are all in turns, and may constitute subdomains involved in late folding steps *in vitro* and *in vivo*. Most likely, the favourable amino acids slow down the aggregation step itself.

(b) Several mutations, while not improving the soluble/insoluble ratios, are useful simply because the cells can be grown to much higher densities without lysis.

(c) The residues most frequently found in the database at framework posi-

tions are not necessarily the best for folding and expression, indicating that the mammalian cell may have more efficient chaperoning mechanisms, allowing it to minimize or even ignore the problems. However, a detailed analysis of these mutations in mammalian cells is still outstanding.

(d) Simple CDR grafting to superior frameworks has variable effects, depending on how much of this problem is contributed by the CDRs themselves.

(e) There is no obvious correlation between thermodynamic stability and folding efficiency (soluble expression yield), provided a minimum stability of an average scFv fragment (of probably a few kcal) is reached.

(f) While the usual problem is protein folding and *not* secretion, there are exceptions. Some antibody frameworks appear to encode too many positive charges in the sequence following the signal sequence, leading to the accumulation of precursor (62).

The ultimate solution for obtaining superior folding antibodies will come from framework engineering, starting from the best-known natural variants. Before this will be achieved, the merits of some more immediate approaches must be discussed.

4.2 Short-term solutions

Since the expression of antibodies on phage goes through an intermediate stage in which the hybrid protein is anchored to the inner bacterial membrane, protein folding of the phage-bound antibody also occurs in the periplasm and probably follows the same, or at least similar, constraints. There is anecdotal evidence from various laboratories that sequences with severe folding problems may be preferentially lost from libraries. It is unclear, however, how efficient this selection is. Usually, phage display is carried out at 37 °C and then only molecules with at least some tolerable properties at this temperature will be selected. Whether this effect is actually desired (i.e all selected antibodies should be at least mediocre folders) or not (the library may become very small and restricted and the very best intrinsic binders, or the ones that recognize the desired epitope, may all be lost) depends on the particular problem at hand. Clearly, the long-term solution will be synthetic libraries in which *all* members have good folding properties.

Another obvious series of experiments is the effect of overexpressing molecular chaperones. The protein-folding reaction in the secretion strategy occurs after transport through the membrane, in the bacterial periplasm. At the time of writing, no general periplasmic bacterial chaperone had been identified (47), and it is generally assumed that there is no ATP in the periplasm. On the other hand, two periplasmic prolyl *cis–trans* isomerases (Sur A (63) and Rot A (64)) and several proteins involved in disulfide formation (DsbA, DsbB, DsbC) (37) have been characterized (47). Furthermore, numerous *E. coli* proteins in cytoplasmic folding have been identified

(65), as have factors involved with bacterial transport. Up to now, however, no dramatic, unequivocal, and *general* positive effect of overexpressing any of these factors on periplasmic antibody expression has emerged (66), to the best of our knowledge (see, for example, ref. 67), the only exception being on T-cell receptor fragments (49). The effect of overexpressing cytoplasmic chaperones during *cytoplasmic* functional expression (see Section 3.3) in *trxB*$^-$ strains has not yet been thoroughly evaluated.

Since the periplasm is connected to the 'outside world' by pores which can be traversed by small molecules, it is tempting to add compounds to the growing culture which are believed to improve folding by preventing aggregation. Sucrose has been reported to be successful in this respect (68, 69), but the effect is clearly not general. With other antibodies tested, no effect whatsoever was seen (L. Nieba and A. Plückthun, unpublished). The same holds true for betaine and sorbitol (70), for which no positive effect whatsoever was detected (L. Nieba and A. Plückthun, unpublished), at least for the antibody fragments tested.

One variable which is almost universally found to be useful, is low temperature. Its most significant effect may be on favourable partitioning of folding intermediates to the folded state and not to aggregates.

In summary, these results point to a great diversity of effects in protein folding among natural antibody sequences, which are clearly determined as much by the details of the sequence as by the common antibody domain topology. Antibodies differ enormously in pI, thermal stability, tendency to aggregate, or surface properties. It is an unsolved question whether the large differences in productivity seen in different hybridomas are also at least partially related to protein folding.

An antibody format must be chosen in which the two domains can assemble in a thermodynamically stable manner, discussed elsewhere in this chapter. We believe that a further analysis of the sequence requirement may provide the most dramatic general solution to the problem.

5. Growth and fermentation

Antibody expression can be carried out on various scales. We will first describe the simplest, small-scale shake-flask culture experiment, then an extremely simple benchtop fermentor—which may supersede the traditional shake-flask cultures in the 2–5 litre-range—and finally fermentation in a stirred tank reactor with more sophisticated controls for high cell-density cultivation with which gram per litre amounts of functional antibody fragments have been obtained. The procedures given are for functional secretion strategies (see Section 3.2).

5.1 Cultivation in standard shake flasks

For shake-flask cultures, complex media are usually used, since the cell density is not a major concern. While LB medium has been frequently used,

somewhat higher cell densities have been obtained with super broth (SB) medium (see below). For most antibodies (but depending on the primary sequence, see Section 4), leakiness of the outer membrane sets in shortly after induction, often ending in complete cell lysis, thus limiting the duration of expression. With SB medium, the onset of leakiness can be somewhat retarded, thereby prolonging the useful time for induction, although the mechanism by which this occurs is still unclear. Antibodies with improved folding properties (naturally occurring or obtained by engineering) can be induced for much longer times at room temperature, often even overnight.

Protocol 2. Shake-flask culture

Equipment and reagents

- 500 ml and 5 litre flasks
- Shaker
- LB agar: aqueous solution of 10 g/litre tryptone, 5 g/litre yeast extract, 5 g/litre NaCl, and 15g/litre agar. Sterilize by autoclaving
- 1 M IPTG
- SB (super broth) medium: for 1 litre SB medium mix the following aqueous solutions, which have been autoclaved separately: 950 ml SB base (20 g/litre tryptone, 10 g/litre yeast extract, 10 g/litre NaCl), 33 ml 1.5 M K_2HPO_4, 5 ml 1 M $MgSO_4$, 10 ml/50% glucose (500 g/litre), and 1 ml of antibiotic stock solution (1000 ×)
- 1000 × antibiotic: 100 mg/ml ampicillin in H_2O or 25 mg/ml chloramphenicol in ethanol

Method

1. Transform the bacterial strain of choice (see text) with the expression plasmid. Plate out on LB agar plates, containing 0.5% glucose (5 g/litre)[a] and the appropriate antibiotic. Incubate overnight at 37 °C then store the plates at 4 °C.
2. Inoculate 50 ml of SB medium (in a 500 ml flask) with a single bacterial colony and shake overnight at 25 °C.[b]
3. Inoculate 1 litre of SB medium (in a 5 litre flask) with the preculture and shake at 25 °C at 150–200 r.p.m., depending on the type of shaker.
4. Induce the expression at OD_{550} = 0.5–1.0, by adding 0.25 ml 1 M IPTG.[c] Continue shaking until the culture reaches the stationary phase.[d]
5. Harvest the cells by centrifugation (8000 *g*, 10 min, 4 °C). Continue with cell disruption and protein purification (see Section 6).

[a] Addition of glucose is optional. However, background expression is reduced if working with the *lac* promoter system in which the *CAP* site is present, and bacterial growth is usually improved.
[b] Fermentation temperature depends on the stability of the expressed antibody fragment. In cases of an exceptionally stable fragment, fermentation can be carried out at 37 °C. However, for most antibody fragments, 25 °C is preferred.
[c] For use with promoter systems using the *lac* operator.
[d] Depending on the strain and properties of the antibody fragment expressed, this will be within 4–6 hours after induction and the final OD_{550} will be 3–6.

5.2 Cultivation in benchtop flasks to medium cell-densities (≤ 5 g/litre)

After the first tests on a recombinant antibody, which may be carried out in shake flasks, larger amounts are often needed, usually 5–50 mg. Typical examples are structural studies using crystallography or NMR, biophysical studies, or animal studies. This range is frequently not easily accessible by shake-flask culture, and a very simple methodology is needed such that several protein mutants can be simultaneously prepared in a short time. For this purpose, we developed a simple benchtop-cultivation flask (*Figure 5*), which is capable of achieving significantly higher cell-densities than shake flasks. Protocols are presented for the use of (a) SB medium (similar to shake-flask culture, see above) and (b) a defined glucose–mineral salt medium (Glu–MM), which is especially useful for the production of labelled proteins and in general for the production of recombinant proteins under well-defined conditions. This medium avoids the sequential consumption of various constituents of the medium, as is the case when using SB medium. To obtain very high cell densities, more sophisticated equipment is needed (see Section 5.3) and only glucose–mineral salt medium should be used.

In general, specific productivities (amount of antibody per cell) appear roughly comparable between the different cultivation systems. However, the controlled growth conditions in the benchtop and high cell-density

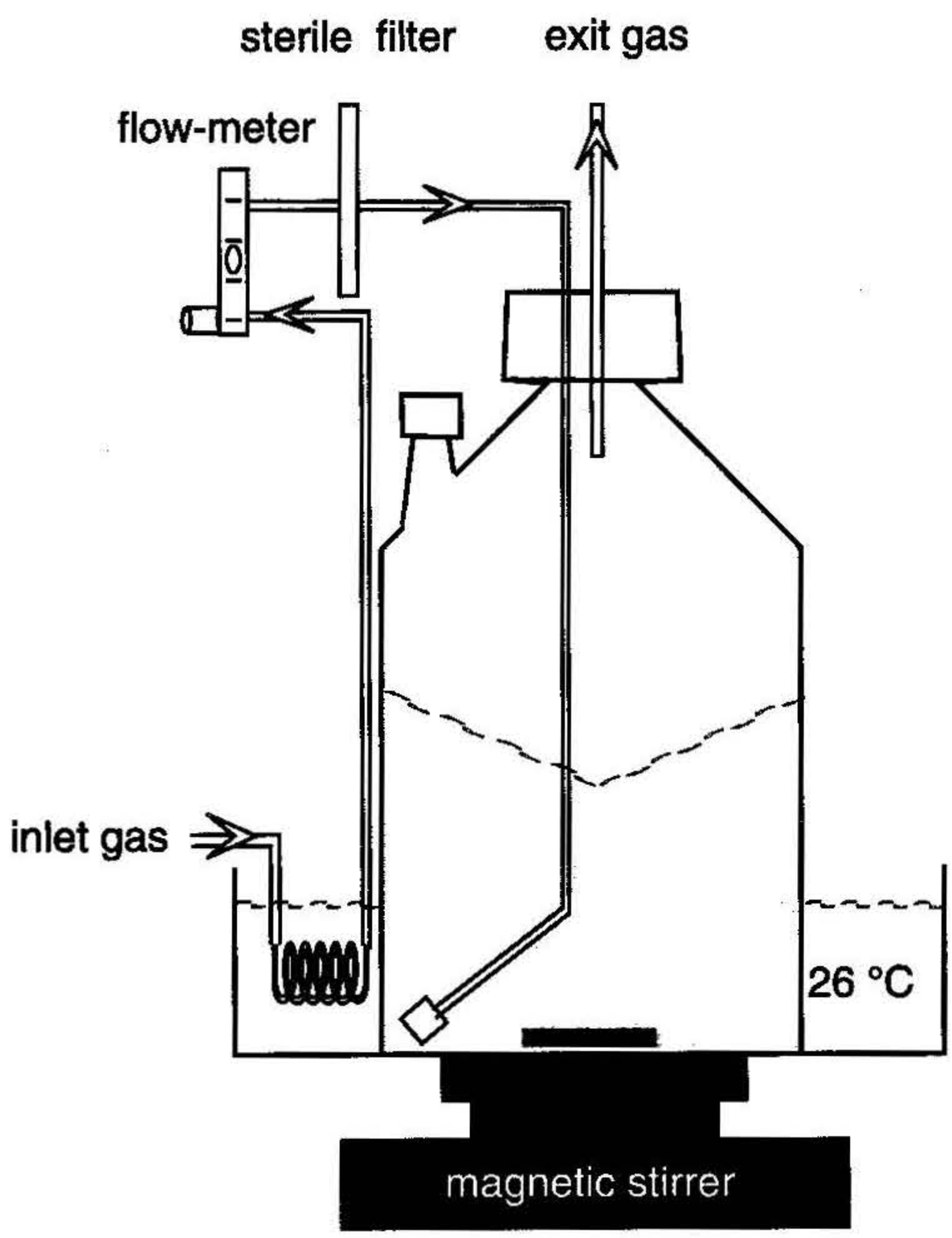

Figure 5. Benchtop-flask (2 L) and cultivation accessories. For further explanations see text.

fermenters lead to lower cell leakage and thus a lower loss of protein to the medium. With the high cell-density fermentation described in *Protocol 6*, up to 4 g active bivalent miniantibody per litre of *E. coli* have been achieved (Riesenberg *et al.*, unpublished observations).

To reach high volumetric yields with simple equipment, one has to analyse the critical factors which limit bacterial growth. (a) A high-yield coefficient (the mass of cells per mass of nutrients) of the medium is necessary, meaning that enough of all nutrients must be present to allow growth of cells to reasonable densities. There is a maximal tolerable concentration, however, which means that if higher cell densities are required, feeding of substrates to the growing culture is necessary (see Section 5.3). Therefore, the simple equipment used here precludes the densities which are achievable in a controlled fermentation. (b) Acid production, notably acetate, of the cells has to be avoided since it poisons the cells and stops growth. Acid production occurs because the glycolysis and tricarboxylic acid cycle are running faster than the respiratory electron–transport chain. To minimize acid production, the culture has to be optimally aerated, and to minimize the effect of the acids it has to be maximally buffered. Since the equipment was designed to be as simple as possible, no pH titration as in high cell-density cultivation (HCDC) is used (see Section 5.3).

The benchtop-flask cultivation of *E. coli* allows exponential growth to a dry biomass of ~5 g/litre in a very simple experimental set-up (*Figure 5*). In addition to a standard bottle, only a waterbath, magnetic stirrer, and pressurized air are necessary. A pH controller is not needed, due to the high buffering capacity of the SB and the Glu–MM medium. The buffering capacity cannot be increased further because higher concentrations of the buffer components ($Na_2PO_4.2H_2O$ and KH_2PO_4) would inhibit growth considerably. Intensive aeration is necessary. The yield coefficient, Y, is the ratio of mass of cells (X) for a given mass of nutrient and can be calculated from growth and substrate consumption. For glucose, $Y_{X/glu}$ is approx. 0.45, for the sole nitrogen source, NH_4Cl, $Y_{X/N}$ is approx. 6 in Glu–MM.

The glucose–mineral salt medium can also be used for complete labelling of recombinant proteins with [^{13}C]glucose and/or [^{15}N]NH_4Cl, as required for NMR studies. Since the amounts of labelled substrates can be calculated from their known yield coefficients (71), an estimation of an almost complete consumption of the labelled substrates via their yield coefficients is possible. Thus, the costs for the labelled compounds can be kept to a minimum. For example, about 50 mg completely labelled recombinant protein can be obtained from one benchtop-flask cultivation, using 1 litre of medium with 5 g final dry biomass/litre, even if the recombinant protein comprises only 1% of the synthesized biomass.

Protocol 3 was successfully applied to *E. coli* RV308 (Section 4.3.1) and *E. coli* BL21 (DE3) containing various expression plasmids. The strain RV308 accumulates the metabolic by-product acetate only at concentrations which are not inhibitory for growth. Acetate production should not exceed 4 g/litre.

Before using other strains, the kinetics of growth, the kinetics of glucose and NH_4Cl consumption, as well as the kinetics of acetate formation, should be determined from samples taken over time and analysed using the assay kits (Section 5.3.4).

Protocol 4 uses the complex SB medium similar to that employed in the shake-flask procedure (*Protocol 2*), and has been applied for the expression of different scFv fragments in *E. coli* JM83, but it should also be useful for other strains.

Protocol 3. Cultivation in 2-litre benchtop flasks, using glucose–mineral salt medium

Equipment and reagents

- The experimental set-up is illustrated in *Figure 5.*

  The benchtop flask is a *2 litre DURAN laboratory bottle with DIN thread* (cat. no. 2180163) fitted with a *screw-cap system with Drechsel head* (cat. no. 2570401); both from Schott Glaswerke.

  For safety reasons, the air pressure should be controlled by a *reducing valve* to ≤ 0.5 bar (Druckregler, 1.6 bar from Ludi & Co., AG).

  The inlet air is temperature-equilibrated by letting it pass through a *copper coil* placed in the waterbath.

  A standard *air-flow meter* with a maximum setting of 20 litres per minute is installed to guarantee a constant flow of air (WISAG).

  Air is sterilized with a *0.2 μm PTFE filter* (Sartorius, model MIDISART 2000).

  A glass tube with a porous sparger at the end (pore size 2) used for generating air bubbles,[a] is connected via *silicon tubing* to the inlet rod of the cap. (Porous sparger supplied by Schott Glaswerke, cat. no. 2585732; note that this appears in the catalogue as 'microfilter candle with narrow tube'.)

  An ordinary *stir bar magnet* (about 4 cm length by about 5 mm diameter) is driven by a *standard magnetic stirrer* (IKAMAG REO).

  The benchtop flask is placed in a *waterbath* and this is then placed on top of the magnetic stirrer with *appropriate support* (e. g. lab. jacks, wooden blocks, etc.).
- 500 ml Erlenmeyer flasks
- Preculture medium (500 ml): dissolve the following in 400 ml water, 17 g $Na_2HPO_4.2H_2O$, 6 g KH_2PO_4, 250 mg NaCl, 2.9 g NH_4Cl, 5 ml iron(III) citrate hydrate (stock at 6 g/L), 50 μl H_3BO_3 (stock at 3 g/100 ml), 50 μl $MnCl_2.4H_2O$ (stock at 15 g/100 ml), 50 μl EDTA.$2H_2O$ (stock at 8.4 g/100 ml), 50 μl $CuCl_2.2H_2O$ (stock at 1.5 g/100 ml), 50 μl $Na_2MoO_4.2H_2O$ (stock at 2.5 g/100 ml), 50 μl $CoCl_2.6H_2O$ (stock at 2.5 g/100 ml), 1 ml Zn $(CH_3COO)_2.2H_2O$ stock at 0.4 g/100 ml).

  Make up to 500 ml and mix, distribute 100 ml to each of five 500 ml Erlenmeyer flasks, and autoclave; pH should be 6.9.

  After autoclaving, to each 100 ml aliquot, add 2 ml 50% glucose (final concentration 10 g/L) and 0.25 ml 24% $MgSO_4{\cdot}7H_2O$.
- Main culture medium (1 litre): dissolve the following in 800 ml water: 34 g $Na_2HPO_4{\cdot}2H_2O$, 12 g KH_2PO_4, 500 mg NaCl, 5.8 g NH_4Cl, 10 ml iron (III) citrate hydrate (stock at 6 g/L), 100 μl H_3BO_3 (stock at 3 g/100 ml), 100 μl $MnCl_2{\cdot}4H_2O$ (stock at 15 g/100 ml), 100 μl EDTA·$2H_2O$ (stock at 8.4 g/100 ml), 100 μl $CuCl_2{\cdot}2H_2O$ (stock at 1.5 g/100 ml), 100 μl $Na_2MoO_4{\cdot}2H_2O$ (stock at 2.5 g/100 ml), 100 μl $CoCl_2{\cdot}6H_2O$ (stock at 2.5 g/100 ml), 2 ml Zn $(CH_3COO)_2{\cdot}2H_2O$ stock at 0.4 g/100 ml). Make up to 1 litre and mix, transfer to 2-litre flask, and autoclave; pH should be 6.9.

  After autoclaving, add 40 ml 50% glucose (final concentration 20 g/L), 2.5 ml 24% $MgSO_4{\cdot}7H_2O$, and 1 drop of antifoaming agent Ucolub N115 (from Fragol Industrieschmierstoff GmbH).
- *E. coli* RV308 cultures (grown on LB agar, see *Protocol 2*)

A. *Precultures*

1. Collect *E. coli* RV308 from Petri-dish (grown overnight on LB agar at 26°C) with 5 ml preculture medium, suspend and vortex.

Protocol 3. *Continued*

2. Inoculate each 100 ml preculture aliquot with 0.8 ml of this cell suspension, incubate in a shaker (200 r.p.m. at 26°C). Five flasks will give enough cells for inoculating the main culture.

B. *Main culture*

1. *Inoculation*: collect exponentially growing precultures by centrifugation (e.g. 450 ml for 5 min at 5500 r.p.m., resuspend in main culture medium and transfer to 1 litre main culture medium in 'benchtop' flask equilibrated at 26°C (initial OD_{550} = 1). OD_{550} measurements are given for a Pharmacia Novaspec II.
2. *Cultivation conditions*: temperature[b] T = 26°C (waterbath); agitation 1300 r.p.m. (using magnetic stirring[c] aeration: use aeration rate of about 6 litres of air per min until OD_{550} reaches about 6, then increase to about 15 litres air per min until the end; induction: add 0.25 ml 1 M IPTG[d] at an OD = 2.
3. Harvest cells by centrifugation (8000 *g*, 10 min, 4°C). Continue with cell disruption and protein purification (see Section 6).

[a] It is important that only very small air bubbles are released from the porous part of the sparger in order to achieve good aeration, i.e. a high transfer rate of oxygen from the gas phase into the liquid phase.
[b] Use temperature-equilibrated air (e.g. passed through copper tubing in the waterbath).
[c] To avoid oxygen limitation, the culture should be grown only to OD_{550} ~ 14 which corresponds to about 5 g dry biomass/litre.
[d] In case of promoter systems using the *lac* operator.

Protocol 4. Cultivation in 2 litre benchtop-flasks, using SB medium

Equipment and reagents

- Benchtop-flask (*Figure 5, Protocol 3*).
- LB agar and SB medium (see *Protocol 2*)
- Antifoam agent, Ucolub N115 (see *Protocol 3*)

Method

1. Follow steps 1 and 2 from *Protocol 2*.
2. Inoculate 1.5 litres of SB medium, containing 0.5 ml antifoam reagent, with the preculture and incubate at 25°C.[a] Set aeration to 6 litres/min and stir with maximal speed.[b]
3. Induce expression at OD_{550} = 1.5–2.0, by adding 0.375 ml 1 M IPTG.[c] Continue incubation until culture reaches the stationary phase.[d]

4. Harvest cells by centrifugation (8000 *g*, 10 min, 4°C). Continue with cell disruption and protein purification (see Section 6).

[a] See *Protocol 2*, note [b].
[b] The speed, which still allows proper rotation of the stirbar, depends on the size of the stirbar, the type of magnetic stirrer, and the distance between the stirrer and stirbar.
[c] In case of promoter systems using the *lac* operator.
[d] Time to stationary phase depends on the strain and properties of the expressed antibody fragment. This will be within 6–8 hours after induction and the final OD_{550} will be about 15.

5.3 Cultivation of *E. coli* in a 10 litre fermenter to high cell-densities (~ 100 g/litre)

We will first describe some peculiarities of high cell-density cultivations (HCDCs). The main problems related to these cultures are (for reviews see refs 72–74):

(a) limitation of and/or inhibition by substrates
(b) limited O_2 supply
(c) formation of inhibitory metabolic by-products (mainly acetate)
(d) evolution of high amounts of CO_2
(e) generation of heat.

Generally, HCDCs consist of a batch phase and a subsequent fed-batch phase to avoid growth inhibition, by high initial amounts of substrates. In developing glucose–mineral salt media, one has to consider the maximum concentration of substrates at which they become inhibitory for growth:

- 50 g per litre for glucose
- 3 g per litre for ammonia
- 10 g per litre for phosphate
- 8.7 g per litre for magnesium
- 0.8 g per litre for molybdenum
- 44 mg per litre for boron
- 4.2 mg per litre for copper
- 68 mg per litre for manganese
- 0.5 mg per litre for cobalt
- 38 mg per litre for zinc
- 1.15 g per litre for iron(II)

Due to the high-yield coefficients of the substrates containing the above-mentioned elements, HCDC media can be designed which contain sufficient amounts for the whole fermentation of all nutrients except glucose, magnesium sulfate, and ammonia. These components must be added in the fed-batch phase. Magnesium sulfate and glucose can be added together in one

feeding solution. The second feeding solution contains ammonia which has a dual function: first it serves as a nitrogen source; second it is used to adjust the pH. To avoid significant precipitation of $Mg(NH_4)PO_4$, the concentration of Mg (e.g. as $MgSO_4 \cdot 7H_2O$) should be low in the initial medium for the batch phase. Additional Mg can be added later on via the feeding solution together with glucose.

There are several ways to meet the increasing oxygen demand of growing *E. coli* cultures, such as increasing the speed of the stirrer, increasing the aeration rate, increasing the molar fraction of oxygen in the gas used for aeration via a gas-mixing station, decreasing the temperature, and decreasing the specific growth rate of the culture. Controls for growth at reduced specific growth rates are also appropriate for reducing the formation of metabolic by-products, for reducing the rate of heat production, and for lowering the rate of formation of CO_2, which are all detrimental for growth over their respective threshold levels.

The formation of growth-inhibitory metabolic by-products, especially acetate (above 5 g/litre), is a serious problem in wild-type strains. Acetate formation is suppressed in glucose–mineral salt media during aerobic growth at a specific growth rate, $\mu < 0.2\ h^{-1}$, which can be achieved by limiting the supply of glucose in the fed-batch phase. Some strains exist with reduced acetate production (see also below).

5.3.1 Strains for HCDC

We use the following host strains for HCDC:

(a) *E. coli* K12 TG1 (DSM 6056): ((*lac-pro*), *sup*E, *thi*E, *hsd*D5/F′*tra*D36, *pro*A^+B^+, *lac*I^q, *lac*ZΔM15). This strain produces significant amounts of acetate in glucose–mineral salt media and has to be forced to grow, via reduced glucose feeding, to high cell densities. In mineral salt media with feeding of glycerol as the carbon source, the acetate formation is much lower than with feeding of glucose.

(b) *E. coli* K12 SK1590: (*gal thi sbc*B15 *end*A *hsd*R4) (75). This thiamine auxotrophic strain behaves in glucose–mineral salt media like *E. coli* TG1.

(c) *E. coli* K12 RV308 (ATCC#31608): (*lac*74-*gal* ISII:OP308 *strA*). Only small (not growth inhibitory) amounts of acetate accumulate during limited or unlimited growth in glucose–mineral salt medium. The mutations responsible are not yet known.

5.3.2 Fermenter and accessories

For HCDCs, stirred tank reactors should contain the usual controls for pH, pressure, temperature, and antifoam dosage control, closed-loop controls for pO_2 with stirrer speed or gas-flow ratio (O_2, air) as controller output variables. It is a good idea to place the fermenter on a balance. In addition, an

exponential feeding of substrate according to a time schedule must be possible for limiting the supply of a carbon source (e.g. glucose, see *Protocol 5*). An on-line measurement and control of the carbon source (e.g. glucose) must be available for unlimited growth to high cell-densities (*Protocol 6*).

Figure 6 shows the experimental set-up we use for HCDCs. The 10 litre fermenter BIOSTAT-ED10 (B. Braun Biotech International) serves as the stirred tank reactor. Accessories include a digital measurement and control unit (DCU) for process control and data monitoring, a multi-fermenter control system (MFCS) for process management, data monitoring, and data storage. The gas-flow ratio controller is used to supply air or air enriched with pure oxygen. The bioreactor exhaust gas stream is analysed with an Uras 10E analyser for carbon dioxide and a Magnos 6G analyser for oxygen (Hartmann & Braun). The fermenter sits on a balance. Feeding devices consist of substrate reservoirs (standard glass bottles), balances (Sartorius), and peristaltic pumps (Watson Marlow). The accessories also include equipment for the generation of exponential profiles for substrate feeding, which includes the dosage controller YFC 02Z and the balance I 8100P-**D from Sartorius and the peristaltic pump WM 5034U/55RPM from Watson Marlow.

The system for on-line monitoring and control of the glucose concentration is shown in *Figure 7* and described in more detail elsewhere (76). A home-made by-pass serves for sampling. The culture is moved at 100 ml per minute through the by-pass with a peristaltic pump (503S, Watson Marlow) and a glass T-piece. After various dilutions (total dilution 1:54), including addition of the metabolism inhibitor NaN_3 (0.01% final concentration) and degassing the modified sample, it is moved into the flow injection analyser (FIA). A commercial FIA (FIAstar 5020 Analyzer, TECATOR) is used for the on-line measurement of glucose. The glucose sensor, based on glucose oxidase (GOD) (Medingen) is built in a 37°C thermostat (FIAstar 5101, TECATOR). GOD converts glucose and oxygen into gluconic acid and hydrogen peroxide. Signals from the electrode are used for calculating the actual glucose concentration. It takes 53 seconds to transport the sample from the fermenter to the glucose sensor, and an additional 60 seconds are needed for measurement. Hence, the total cycle time for glucose analysis amounts to about 2 minutes. This period for data acquisition is sufficiently short, even at high cell-densities. The control and feeding device is also shown in *Figure 7*. Via a serially FIA-connected laptop an analogue signal is sent to the glucose controller in the digital control unit. This controller determines glucose feeding with a peristaltic pump (503U/55 r.p.m., Watson Marlow). Glucose is usually controlled at a level of 1.5 g/litre.

5.3.3 Fed-batch strategies for the cultivation of *E. coli* at various specific growth rates

There are many strategies for cultivating *E. coli* to high cell-densities. The vast majority of the HCDC-literature describes processes characterized by a

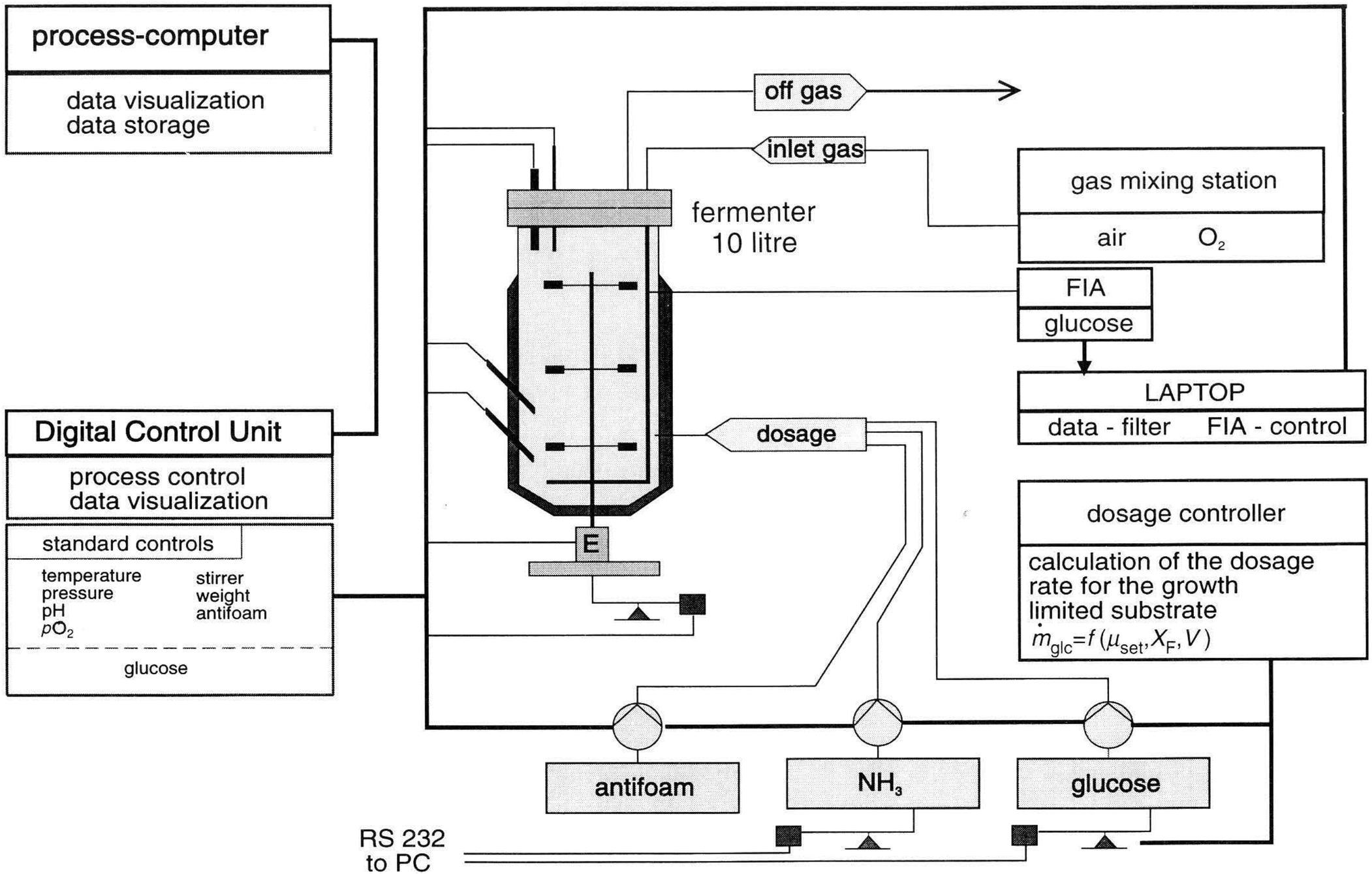

Figure 6. Experimental fermenter set-up. For further explanations see text.

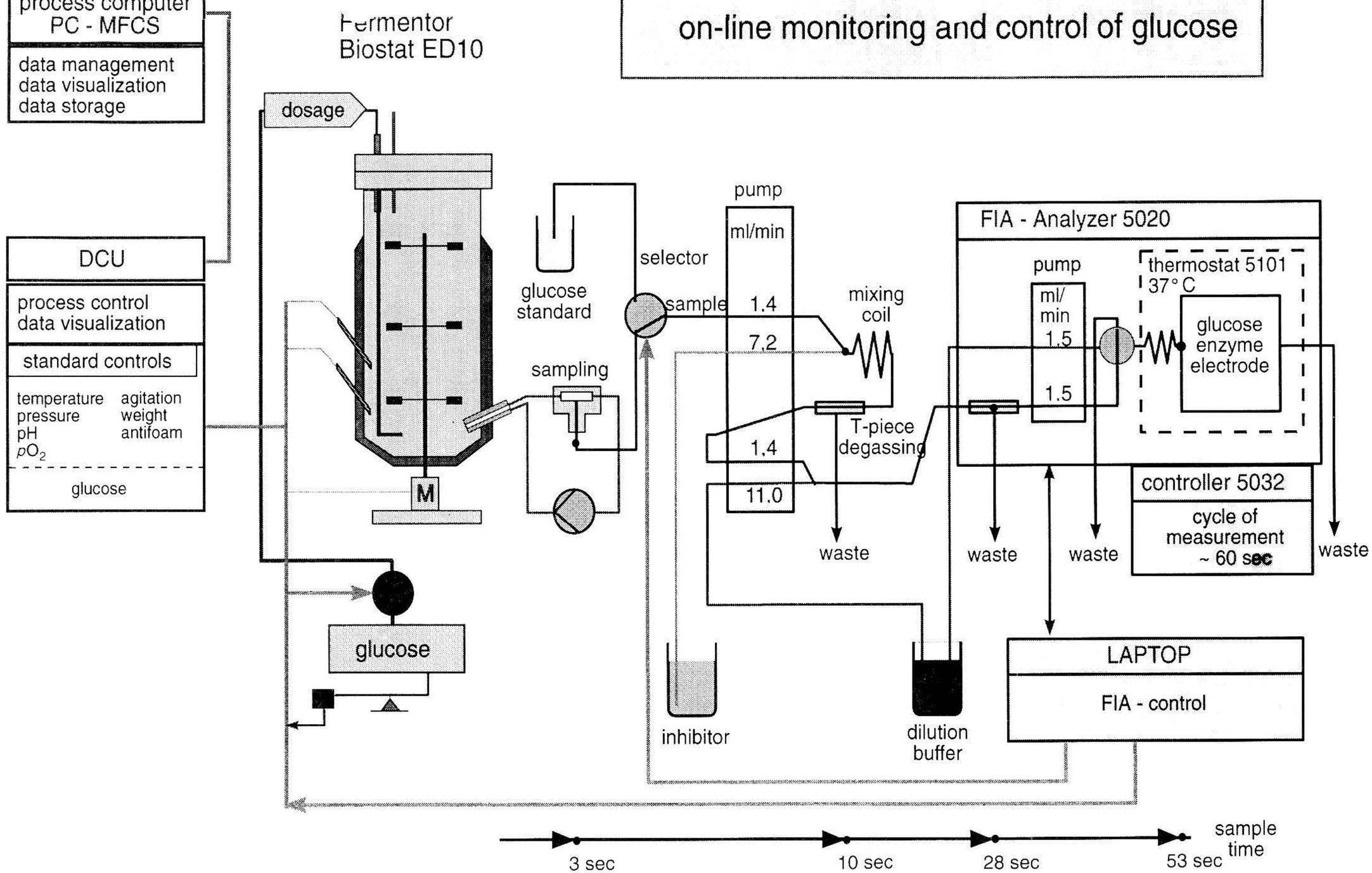

Figure 7. Fermenter coupled flow-injection analyser (FIA) for on-line monitoring and control of the glucose concentration in the culture. For further explanations see text.

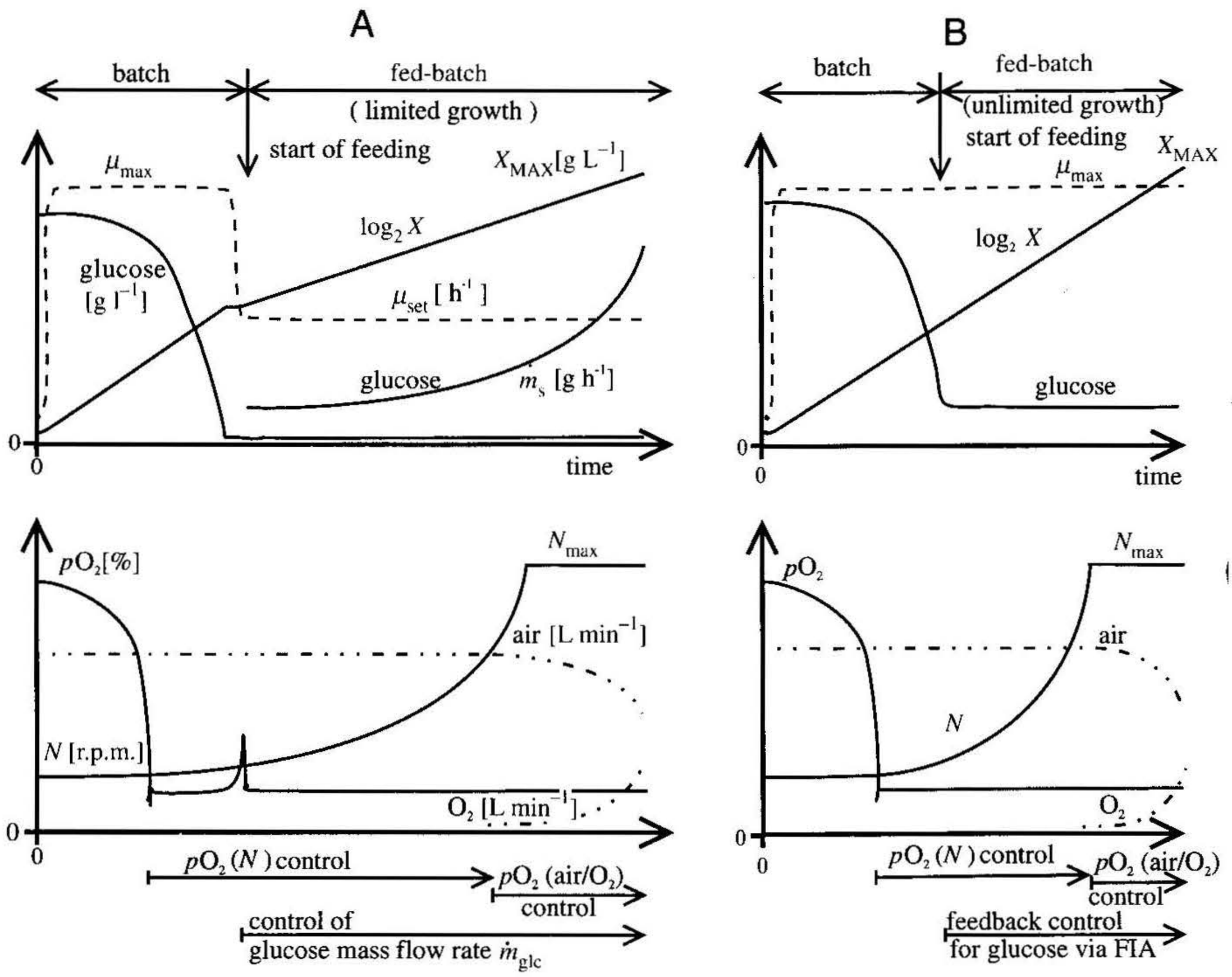

Figure 8. Principles of high cell-density cultivations (HCDCs) with limited (left) and unlimited (right) growth in the fed-batch phase. A, HCDC-type 1: glucose feeding such that a submaximal growth-rate results ($\mu_{fed\text{-}batch} < \mu_{max}$). B, HCDC-type 2: controlled supply of glucose resulting in non-limited growth ($\mu_{fed\text{-}batch} = \mu_{max}$).

limited supply of carbon sources (77–81). In these, the cells are forced to grow at reduced specific growth rates μ, with the advantage of only a slow and small accumulation of the metabolic by-product acetate. Few reports describe the use of strains or mutants with reduced acetate formation under aerobic conditions. But, in these cases, the feeding of substrates has only been manually controlled, until now (32, 82, 83). *Figure 8* illustrates the two main principles of HCDCs. The first type is characterized by limited growth in the fed-batch phase ($\mu_{set} < \mu_{max}$). The concentration of glucose in the culture is always nearly zero due to its limited supply and its immediate consumption (*Protocol 5*) (*Figure 8*). The second type is characterized by a controlled supply of glucose, so that the concentration of glucose is always above zero (e.g. grams per litre). Thus, this type of HCDCs allows unlimited growth during the fed-batch phase ($\mu_{fed\text{-}batch} = \mu_{max}$). Only strains with no, or drastically reduced, acetate formation (82–86) can follow type 2 to high cell-densities.

Protocol 5. HCDC—type 1[a]: feeding of glucose limiting growth ($\mu_{fed\text{-}batch} < \mu_{max}$)

Equipment and reagents

- See *Figure 6*, the glucose-FIA and the gas-mixing station are not necessary
- Preculture medium (1 litre): to 800 ml H_2O add 8.6 g $Na_2HPO_4{\cdot}2H_2O$, 3 g KH_2PO_4, 500 mg NaCl, 1 g NH_4Cl, 10 ml iron(III) citrate hydrate (stock at 6 g/L), 100 µl H_3BO_3 (stock at 3 g/100 ml), 100 µl $MnCl_2{\cdot}4H_2O$ (stock at 15 g/100 ml), 100 µl EDTA·$2H_2O$ (stock at 8.4 g/100 ml), 100 µl $CuCl_2{\cdot}2H_2O$ (stock at 1.5 g/100 ml), 100 µl $Na_2MoO_4{\cdot}2H_2O$ (stock at 2.5 g/100 ml), 100 µl $CoCl_2{\cdot}6H_2O$ (stock at 2.5 g/100 ml), 2 ml $Zn(CH_3COO)_2{\cdot}2H_2O$ (stock at 0.4 g/100 ml). Make up to 1 litre and mix, aliquot 100 ml into each of five 500 ml Erlenmeyer flasks, and autoclave; pH should be 6.9.

  After autoclaving, add the following sterilized solutions separately to each 100 ml aliquot: 2 ml 50% glucose (final concentration 10 g/L) and 0.25 ml 24% $MgSO_4{\cdot}7H_2O$ (final concentration 0.6 g/L).
- Main culture medium (for 10-litre fermenter, volume 8 litres): dissolve the following in 6 litres H_2O, 132.8 g KH_2PO_4, 32 g $(NH_4)_2HPO_4$, 17 g citric acid, 100 ml iron(III) citrate hydrate (stock at 6 g/L), 1 ml H_3BO_3 (stock at 3 g/100 ml), 1 ml $MnCl_2{\cdot}4H_2O$ (stock at 15 g/100 ml), 1 ml EDTA·$2H_2O$ (stock at 8.4 g/100 ml), 1 ml $CuCl_2{\cdot}2H_2O$ (stock at 1.5 g/100 ml), 1 ml $Na_2MoO_4{\cdot}2H_2O$ (stock at 2.5 g/100 ml), 1 ml $CoCl_2{\cdot}6H_2O$ (stock at 2.5 g/100 ml), 20 ml $Zn(CH_3COO)_2{\cdot}2H_2O$ (stock at 0.4 g/100 ml). Make up to 7 litres (1 litre comes from the inoculum), mix, and autoclave; pH should be 6.9.

  After autoclaving, add the following sterilized solutions separately: 200 g glucose in 500 ml water (final concentration 25 g/L) and 12 g $MgSO_4{\cdot}7H_2O$ in 50 ml water (final concentration 1.5 g/L). Adjust pH to 6.8 with ~73 ml 25% (v/v) NH_3. Make up to 8 litres.
- 25% NH_3 (v/v) (for adjusting pH)
- Feeding solution[b] (glucose–magnesium sulfate solution): dissolve 750 g glucose in 600 ml water (gives ~1070 ml solution), and autoclave. Dissolve 22.2 g $MgSO_4{\cdot}7H_2O$ in 50 ml water, and autoclave. These two solutions are mixed and fed together.
- LB medium (*Protocol 2*, without agar)
- Culture grown on LB agar (*Protocol 2*)
- 50 ml, 500 ml, 1 L, and 10 L flasks

A. *Precultures*[c]

1. Use some colonies from a Petri-dish (grown overnight on LB agar at 26°C) to inoculate 10 ml liquid LB medium in a small flask; shake for 5 h (200 r.p.m., 26°C); transfer about 1 ml culture to 100 ml medium in 500 ml flasks for preculture 1 and incubate overnight as above; use about 10 ml for inoculating 100 ml of medium in 500 ml flasks for preculture 2 (9 flasks altogether) and incubate for several hours as above to obtain enough biomass to start the main culture (8 litres) at OD_{550} ~0.2.

B. *Main culture in the BIOSTAT ED10™ fermenter*[d]

1. **Conditions**:
   (a) Operate the fermenter for the production of miniantibodies at a temperature of 26°C,[e] a pressure of 0.15 MPa, a pH of 6.8,[f] and a gas-flow rate of 10 L min^{-1}.

Protocol 5. *Continued*

(b) Suppress foaming by controlled supply of an antifoam reagent.[g]

(c) Control the pO_2 to be ≥ 20% of saturation.[h]

(d) Set the initial agitation[i] to about 300 r.p.m.

2. **Batch phase**:

(a) Inoculate the fermenter with an exponentially grown preculture.

(b) Take samples for off-line analysis to follow growth and substrate consumption.

(c) Estimate, in advance, the time for the end of the batch phase on the basis of the kinetics of OD_{550} and glucose, including the yield coefficient for glucose.

(d) Carefully watch the sudden rise in pO_2 after the complete consumption of initial glucose.

(e) Let the culture starve for some minutes to allow the metabolization of the excreted acetate.

3. **Fed-batch phase**:

(a) Calculate the initial glucose mass flow rate (see below).

(b) Start the glucose feeding.

(c) Take samples as above.

(d) Induce[j] product (e.g. miniantibody) formation at the desired biomass concentration.

(e) Calculate the glucose mass flow rate ($\dot{m}_{glc}$) (see also nomenclature for symbols and explanations at the end of this chapter):

$$\dot{m}_{glc}(t) = Q_{glc,F} \cdot m_c\,(t) \cdot s^{-1} \cdot \exp\,[\mu_{set}\,(t - t_F)],$$
$$\text{with } Q_{glc,F} = [(\mu_{set} \cdot Y_{X/glc}^{-1}) + m_E] \cdot X_F.$$

$Q_{glc,F}$ is the initial glucose mass flow rate at the start of the feeding. Calculate the biomass at the start of feeding from the measured optical density (OD_{550}) of the culture knowing the conversion coefficient between OD_{550} and X. Since $\mu_{set} = 0.2\ h^{-1}$, $Y_{X/glc} \sim 0.45$, $m_E \sim 0.025\ g\ g^{-1}\ h^{-1}$ are fixed values, $Q_{glc,F}$ can also be calculated. Measure the weight of the culture continuously. The actual glucose mass flow rate $\dot{m}_{glc}(t)$ is continuously calculated by the process computer and transferred to the glucose feeding pump for glucose feeding.

[a] The process strategy for HCDC based on time-dependent exponential substrate feeding according to refs. 79–81, 87.

[b] The composition and preparation of media and feeding solution are essentially those described by Riesenberg *et al.* (77, 78).

[c] An attractive alternative is the use of glycerol stocks with high cell titre (about 10 g dry biomass per litre) for direct inoculation of the medium for the main culture. Riesenberg *et al.* (88) have described the preparation, long-term storage, and application of the special *E. coli* glycerol stocks. The inoculation ratio is 1:300, i.e. about 35 ml stock are sufficient for 10 litres to begin the fermentation with a reasonable amount of biomass. In glucose–mineral salt media the consumption of glycerol is suppressed until glucose, has been completely consumed.

[d] If only a fermenter which does not sit on a balance is available, quasi-exponential glucose feeding can be realized using the dosage controller (see *Figure 6*) alone. In that case, one makes the simplification m_c = const. (see above).

[e] This temperature is optimal for formation of miniantibodies during HCDC according to Pack *et al.* (32).

[f] Aqueous ammonia (25% or less concentrated) serves for adjustment of the pH and as the nitrogen source for growth.

[g] Ucolub N115 is an appropriate antifoam agent during HCDC of *E. coli* RV308 producing miniantibodies and other recombinant proteins. It can be purchased from Fragol Industrieschmierstoff GmbH.

[h] Two closed-loop controls for pO_2 operate throughout the whole fermentation: first pO_2 (agitation) and second pO_2 (gas-flow ratio). The gas is air or air-enriched with pure oxygen.

[i] The initial speed of the stirrer should be low. This guarantees that the pO_2 (agitation)-control starts in the batch-phase after the pO_2 reaches the set-value of 20% saturation. This enables a sudden rise in the pO_2 to high saturation values after the complete consumption of the initially added glucose. Thus, the end of the batch phase is clearly indicated.

[j] We used a *lac p/o*-expression-system to induce antibody formation (32). The addition of 1 mM IPTG (final concentration) at cell densities up to 70 g dry biomass per litre is sufficient for induction.

Protocol 6. HCDC[a]—type 2: feeding of glucose during non-limiting growth ($\mu_{fed\text{-}batch} = \mu_{max}$)

Equipment and reagents

- See *Figures 6* and *7*. The flow injection analysis (FIA) for on-line measurement and control of glucose is necessary. The fermenter balance is not needed.
- Preparation of media and feeding solution: see *Protocol 5*

Method

1. Precultures: see *Protocol 5.*
2. Carry out the main culture in the BIOSTAT-ED10™ fermenter.
3. For initial growth conditions see *Protocol 5.*
4. Inoculation and sampling of the batch phase are the same as in *Protocol 5.* Follow the decrease of glucose concentration in the culture, start the glucose-FIA after the glucose concentration has fallen below 8 g/L, control the glucose concentration at 1.5 g/L.[a]
5. For the fed-batch phase, let the glucose-FIA operate until the end of the fermentation, induce product (e.g. miniantibody) formation at the desired biomass concentration according to *Protocol 5.*

Protocol 6. *Continued*

[a] HCDC-type 2 is distinguished from HCDC-type 1 with respect to the pO_2 kinetics during the transition from the batch phase to the fed-batch phase. Since the glucose-FIA is started before the initial glucose is completely consumed, no intermediate increase in pO_2 occurs (see *Figures 8A* and *B)*. Nevertheless, the controls for maintaining pO_2 at 20% saturation are the same for both HCDC-types. Due to the higher specific growth rate of the cells growing in the fed-batch phase of HCDC-type 2, the duration of HCDC-type 2 is considerably shorter than HCDC-type 1. It must be stressed, however, that only strains with significant reduced acetate accumulation (e.g. *E. coli* RV308) can be cultivated at μ_{max} until high biomass concentrations (~100 g L^{a-1}).

5.3.4 Off-line analysis

Glucose is analysed using the glucose analyser ESAT 6660 (Medingen) or the glucose test kit No. 716251 from Boehringer Mannheim. Ammonia nitrogen is determined in the usual way using the Kjeldahl method or the ammonia test kit No. 1112732 from Boehringer Mannheim. Acetate is determined using the test kit No. 148261 from Boehringer Mannheim. Other tests are available (89). Determination of cell density and biomass: cell density is measured with Novaspec II (Pharmacia) as optical density (OD) in a 1 cm light-path cuvette at 550 nm either directly or after dilution of the culture with 0.9% NaCl solution. Cell dry weight X (g L^{-1}) is calculated on the basis of a calibration curve (e.g. for *E. coli* RV308 according to $X = 0.36\ OD_{550}$).

6. Antibody purification

Almost all biochemical or biomedical work will have to be carried out with purified antibody fragments, be it for an evaluation of binding properties or the measurement of biological effects. However, the degree of purity required can vary depending on the experiment. We describe here a general and extremly fast technique, which should permit the purification of antibody fragments to high purity. It is particularly important that this technology is scaleable over a very wide range.

6.1 General considerations

Since antibody fragments vary widely in surface composition and isoelectric points, there can be no generic purification scheme based on classical approaches, such as ion-exchange chromatography. While recombinant antibodies *can*, of course, be purified with these techniques, a new procedure would have to be worked out for every antibody. This will only be worthwhile if very large amounts of the same fragment are required at very high purity—e.g. for a clinical study.

The framework of the variable domains is itself not constant enough to act as a generic affinity purification scheme (90). Often antibodies are prepared as fusions for purification. These fusion can be very small peptide tags at either

end of the domain or fusions to other protein domains, including of course the constant domains.

Most fusions in use today, notably peptides, are themselves recognized by another protein which needs to be immobilized (91). However, affinity columns with a protein ligand are fairly impractical on large scales: they are expensive and sometimes difficult to regenerate if used on raw extracts. Furthermore, the conditions which disrupt the intermolecular forces are the same conditions which destabilize the intramolecular forces within the antibody and immobilized ligand, and either protein may denature after applying the elution conditions, unless a competing ligand is available (reviewed in ref. 91).

6.2 Immobilized metal ion-affinity chromatography (IMAC)

We have previously described (54) the methodology of oligo-histidine tails with IMAC (92) in purifying antibody fragments in a one-step procedure in the native state. Upon frequent use of this method with a variety of antibodies we have discovered, however, that not every fragment can be purified to the same degree of purity in a single step. Our working assumption is that difficulties may be related to the formation of small, soluble aggregates of the antibody, leaving only few his-tails per monomer available. Furthermore, association with foreign molecules may explain the presence of more contaminants with some recombinant antibodies than others. Finally, low expression rates may simply introduce more *E. coli* background, when normalized to the same amount of recombinant protein.

Thus, it is sometimes necessary to include a second purification step after IMAC. Most convenient is ion-exchange chromatography. However, in traditional chromatography, this would be rather laborious: the eluant from standard condition IMAC, high in salt and imidazole, would first have to be dialysed before ion-exchange chromatography. Therefore, we have now developed a method with two columns directly in-line, which can perform both steps together in about 15 min (*Figure 9*, *Protocol 7*) (C. Krebber, L. Nieba, and A. Plückthun, unpublished).

IMAC relies on the metal-chelating ability of juxtaposed histidine residues (92). In order for this to be selective over any ion-exchange effects with the immobilized metal, high salt has to be included. In the procedure detailed below, the sample is loaded on to the IMAC column at pH 7.0 or 8.0 in high salt. Next, the buffer is changed to low salt and a gradient of imidazole is started. Imidazole, being a competitive ligand for the metal, elutes the protein under very mild conditions. The relevant fractions are then directly pumped on to the second column, which is usually an ion-exchange column, although other columns can also be used.

Depending on the ion-exchange column used (see below), the protein will bind because of the low salt. Ion-exchange chromatography is barely influenced by imidazole, if its pH is adjusted with acetic acid. Then, a salt gradient

can be started to purify the antibody fragment directly. The whole procedure with both columns will take as little as 15 min.

The ion-exchange column can be chosen with the following criteria in mind. Most *E. coli* proteins have isolectric points around 4–6 (93), and are thus negatively charged at pH 7.0. If the antibody fragment, whose isolelectric point is almost invariably known from its sequence at this stage, has a predicted positive net charge at pH 7.0, it will often be in the run-through of an anion exchanger, and it would be bound almost by itself by a cation exchanger. Since very acidic isoelectric points of antibodies are rare, most fragments are easy to purify away from the remaining *E. coli* proteins at this stage.

Annoying contaminants are co-purified proteases of *E. coli* (under native and denaturing conditions (54)), which may degrade some fragments upon extended storage. In our hands, all low molecular weight protease inhibitors investigated so far have been disappointing, and thus the most important precaution against proteases is great care during the purification steps, including rigorous regeneration of the columns.

Two commercial resins for IMAC are available from different manufacturers: iminodiacetic acid (IDA) and nitrilo-triacetic acid (NTA). Both have been used successfully for antibody purification (54). For perfusion chromatography, special materials are necessary (94). Only IDA is currently available for IMAC perfusion chromatography and therefore the 2-step method has been worked out on this material with immobilized nickel. Nevertheless zinc (sometimes found to be a better ligand for IDA (54)) might work as well as nickel does. In standard chromatography we have found that in general Ni–NTA is the favoured material for scFv purification.

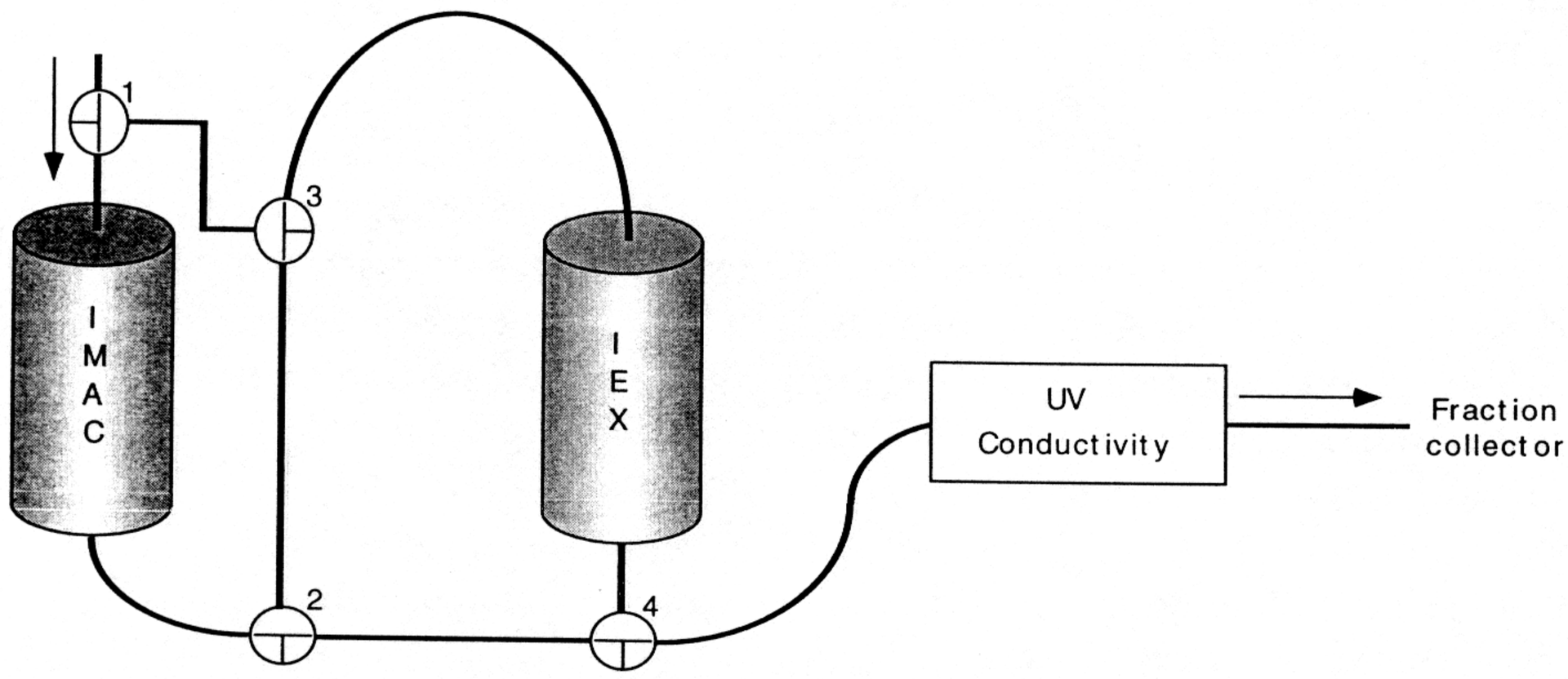

Figure 9. Tubing diagram for rapid two-column purification of antibody fragments. At the beginning of the chromatography, all flow is through IMAC (valve positions as shown). Upon antibody elution, the flow is redirected to the ion-exchange column (IEX), by turning valves 2 and 4. The adsorbed protein is then eluted with a new gradient, by turning valves 1 and 3.

While the following procedure is described for the BioCAD system (Perseptive Inc.), it should be straightforward to adapt to any computerized chromatography system, or even manual chromatography, if the tubing diagram in *Figure 9* is followed.

Protocol 7. Purification of a single-chain Fv fragment with histidine tail by rapid two-column chromatography

This protocol is given for 5–10 g wet weight of *E. coli* cells (2 L of shake-flask culture).

Equipment and reagents

- Appropriate expression system to produce his-tagged antibody fragments
- Extraction buffer: 20 mM Hepes, 0.5 M NaCl adjusted to pH 7 with NaOH
- DNaseI (Boehringer Mannheim) 1 mg/ml in 50 mM Tris–Cl, 10 mM $MgCl_2$, pH 7.5
- Automated LC-System: BioCAD60 workstation with dual channel variable wavelength UV/visible detector, semipreparative flow cell (PerSeptive Biosystems), fraction collector Advantec SF-2120 (Toyo Roshi International)
- Columns: POROS20 MC/M 4.6 mm/100 mm (metal chelate)
  POROS20 HQ/M 4.6 mm/100 mm (anion exchange)
  POROS20 HS/M 4.6 mm/100 mm (cation exchange)
  (all PerSeptive Biosystems)
- Cell disruptor: French Press (Aminco)
- Centrifuge (Sorvall SS-34)
- Metal ion stock solution: 0.5 M $NiCl_2$
- Stock buffer system used on the BioCAD workstation:
  —100 mM MHA adjusted to pH 4.5 with HCl (33 mM Mes, 33 mM Hepes, 33 mM sodium acetate)
  —100 mM MHA adjusted to pH 7.5 with NaOH (33 mM Mes, 33 mM Hepes, 33 mM sodium acetate)
  —100 mM imidazole adjusted to pH 7 with acetic acid
  —3 M NaCl stock solution
  —distilled water
- SDS–PAGE equipment and reagents

Note: This method can be carried out with columns and chromatographic equipment from other manufacturers as long as the general principles laid out in the text and *Figure 9* are followed.

Method

1. Resuspend the cell pellet in 15–20 ml Hepes extraction buffer.
2. Disrupt the cells in a French Press.
3. Add DNaseI to a final concentration of 10 μg/ml.
4. Centrifuge the suspension (Sorvall SS-34, 48 200 *g*, 4 °C, 30 min) and carefully collect the supernatant.
5. Filter the solution (0.22 μm, use filter with low protein binding properties).
6. Load the filtrate on to an Ni–IDA Poros column (1.66 ml) (preloaded with 3 ml 0.5 M $NiCl_2$) pre-equilibrated with 20 mM MHA-buffer (6.6 mM Mes, 6.6 mM Hepes, 6.6 mM Na-acetate), 0.5 M NaCl, pH 7.0. The flow rate should be 6 column volumes (CV) per minute.

Protocol 7. *Continued*

7. After loading the sample, wash the column with 20 mM MHA-buffer (pH 7.0) containing 0.5 M NaCl until the baseline is reached.
8. A washing step with 5 mM imidazole, 0.5 M NaCl, pH 7.0 is then applied for 5 CV, followed by a 5 mM imidazole washing step **without** salt.[a]
9. Perform the elution either using an imidazole gradient from 5 to 80 mM imidazole (pH 7.0) (**no salt**) (10 CV) or a step elution with 80 mM imidazole (pH 7.0) (**no salt**) (6 CV).[a]
10. Use the BioCAD workstation to allow loading of the IDA-elution directly on to a second column, without collecting the samples.[b,c,d]
11. This column can be either an anion-exchange or a cation-exchange column.[b] After automatically loading the imidazole elution on to the second column, wash the column with 20 mM MHA-buffer, 30 mM NaCl, pH 7.0 until the baseline is reached (5 CV).
12. Use salt gradient from 30 to 750 mM NaCl (15 CV) for the cation-exchange chromatography. Collect the samples in 2 ml fractions and analyse each fraction by SDS-PAGE.

Note: Purification with the anion-exchange chromatography often does not need a salt gradient, because the scFv fragment may be in the flow-through.[b]

[a] The pH for the second washing step and the elution depends on the pI of the antibody fragment and on the type of the second column (i.e. if the antibody has a pI of 8.5 the pH should be adjusted to 7.0, a cation-exchange column will be the best choice).
[b] Most of the *E. coli* host proteins co-purified in IMAC have a pI less then 6.5, therefore they will bind to an anion-exchange column. A salt gradient for separation usually works very well.
[c] Imidazole as a storage buffer and as a sample component in SDS-PAGE is not desirable, because it will catalyse the hydrolysis of acid labile bonds (*The QIA-expressionist* (1992), 2nd edn, p. 43 (from Quiagen)). Therefore, the 2-step method might even be useful for those antibody fragments which are already pure enough after the IMAC step.
[d] This coupled method can also be carried out on standard chromatography system or on an FPLC set-up, using the general tubing diagram in *Figure 9*.

Acknowledgements

We thank Kristian Müller for designing prototypes of the benchtop cultivation flasks and all the group members for helpful discussions and constructive criticism throughout the method development. We are grateful to Sylke Fricke and Silke Steinbach for excellent technical assistance.

Appendix: Abbreviations for HCDC

d	doubling time of biomass, h
d_{set}	desired doubling time, h
FIA	flow-injection analysis
HCDC	high cell-density cultivation
m_c	weight of the culture, g
m_E	maintenance coefficient, for *E. coli*
$\dot{m}_{glc}$	substrate (glucose) mass flow rate, g h^{-1}
μ	specific growth rate ($\mu = (\ln 2) \cdot d^{-1}$), h^{-1}
μ_{max}	maximum specific growth, h^{-1}
μ_{set}	desired specific growth rate, h^{-1}
N	stirrer speed, r.p.m.
N_{max}	maximum stirrer speed
pO_2	dissolved oxygen concentration, % of saturation
$Q_{glc,F}$	volumetric substrate consumption rate at start of feeding, g L^{-1} h^{-1} $Q_{glc,F} = [\mu_{set} \cdot (Y_{X/glc}^{-1}) + m_E] \cdot X_F$
t	cultivation time, h
t_F	starting time of fed-batch mode, h
V_L	culture volume, $V_L(t) = m_c(t) \cdot s^{-1}$, L (s = density of culture, g $litre^{-1}$)
X	cell dry-mass concentration (biomass), g L^{-1}
X_F	biomass at start of feeding, g L^{-1}
X_{max}	maximum biomass, g L^{-1}
$Y_{X/glc}$	yield coefficient for glucose (formed biomass per consumed glucose)

References

1. Plückthun, A. (1994). *Handbook of experimental pharmacology*, vol 3: *The pharmacology of monoclonal antibodies* (ed. M. Rosenberg and G. P. Moore), pp. 269–315. Springer-Verlag, Berlin.
2. Plückthun, A. (1994). In *Immunochemistry* (ed. C. J. van Oss and M. H. V. van Regenmortel), pp. 201–36. Marcel Dekker, New York.
3. Winter, G., Griffiths, A. D., Hawkins, R. E., and Hoogenboom, H. R. (1994). *Annu. Rev. Immunol.*, **12**, 433.
4. Kütemeier, G., Harloff, C., and Mocikat, R. (1992). *Hybridoma*, **11**, 23.
5. Adair, J. R. (1992). *Immunol. Rev.*, **130**, 5.
6. Prodromou, C. and Pearl, L. H. (1992). *Protein Eng.*, **5**, 827.
7. Desplancq, D., King, D. J., Lawson, A. D. G. and Mountain, A. (1994). *Protein Eng.*, **7**, 1027.
8. Whitlow, M., Filpula, D., Rollence, M. L., Feng, S. L., and Wood, J. F. (1994). *Protein Eng.*, **7**, 1017.
9. Griffiths, A. D., Malmquist, M., Marks, J. D., Bye, J. D., Embleton, M. J., McCafferty, J., Baier, M., Holliger, K. P., Gorick, B.D., Hughes-Jones, N. C., Hoogenboom, H. R., and Winter, G. (1993). *EMBO J.*, **12**, 725.

10. Holliger, K. P., Prospero, T., and Winter, G. (1993). *Proc. Natl Acad. Sci. USA*, **90**, 6444.
11. Zhou, H., Fisher, R. J., and Papas, T. S. (1993). *Nucl. Acids Res.*, **22**, 888.
12. Ørum, H., Andersen, P. S., Øster, A., Johansen, L. K., Riise, E., Bjønvad, M., Svendsen, I., and Engberg, J. (1993). *Nucl. Acids Res.*, **21**, 4491.
13. Kettleborough, C. A., Saldanha, J., Ansell, K. H., and Bendig, M. M. (1993). *Eur. J. Immunol.*, **23**, 206.
14. Knappik, A. and Plückthun, A. (1994). *Biotechniques*, **17**, 754.
15. Wentzell, L. M., Nobbs, T. J., and Halford, S. E. (1995). *J. Mol. Biol.*, **248**, 581.
16. Ge, L., Knappik, A., Pack, P., Freund, C., and Plückthun, A. (1995). In *Antibody engineering* (2nd edn) (ed. C. A. K. Borrebaeck), pp. 229–66. Oxford University Press.
17. M. J. Gait (ed.) (1984). *Oligonucleotide synthesis: a practical approach*. IRL Press, Oxford.
18. Nezlin, R. (1994). In *Immunochemistry* (ed. C. J. van Oss and M. H. V. van Regenmortel), pp. 3–45. Marcel Dekker, New York.
19. Huston, J. S., McCartney, J., Tai, M. S., Mottola, H. C., Jin, D., Warren, F., Keck, P., and Oppermann, H. (1993). *Int. Rev. Immunol.*, **10**, 195.
20. Raag, R. and Whitlow, M. (1995). *FASEB J.*, **9**, 73.
21. Jefferis, R. (1993). *Glycoconj. J.*, **10**, 358.
22. Lo, K. M., Roy, A., Foley, S. F., Coll, J. T., and Gillies, S. D. (1992). *Hum. Antibodies Hybridomas*, **3**, 123.
23. Bird, R. E., Hardman, K. D., Jacobson, J. W., Johnson, S., Kaufman, B. M., Lee, S., Lee, T., Pope, S. H., Riordan, G. S., and Whitlow, M. (1988). *Science*, **242**, 423.
24. Huston, J. S., Levinson, D., Mudgett-Hunter, M., Tai, M., Novotny, J., Margolies, M. N., Ridge, R. J., Bruccoleri, R. E., Haber, E., Crea, R., and Oppermann, H. (1988). *Proc. Natl Acad. Sci. USA*, **85**, 5879.
25. Glockshuber, R., Malia, M., Pfitzinger, I., and Plückthun, A. (1990). *Biochemistry*, **29**, 1362.
26. Reiter, Y., Brinkmann, U., Webber, K. O., Jung, S. H., Lee, B., and Pastan, I. (1994). *Protein Eng.*, **7**, 697.
27. Plückthun, A. (1993). In *Stability and stabilization of enzymes* (ed. W. J. J. van den Tweel, A. Harder, and R. M. Buitelaar), pp. 81–90. Elsevier Science Publishers, Amsterdam.
28. Knappik, A. and Plückthun, A. (1995). *Protein Eng.*, **8**, 81.
29. Huston, J. S., George, A. J. T., Tai, M. S., McCartney, J. E., Jin, D., Segal, D. M., Keck, P., and Oppermann, H. (1995). In *Antibody engineering* (ed. C. A. K. Borrebaeck) (2nd edn), pp. 185–227. Oxford University Press.
30. Huston, J. S., Mudgett-Hunter, M., Tai, M. S., McCartney, J., Warren, F., Haber, E., and Oppermann, H. (1991). In *Methods in enzymology* (ed. J. J. Langone, Vol. 203, pp. 46. Academic Press, San Diego.
31. Pack, P. and Plückthun, A. (1992). *Biochemistry*, **31**, 1579.
32. Pack, P., Kujau, M., Schroeckh, V., Knüpfer, U., Wenderoth, R., Riesenberg, D., and Plückthun, A. (1993). *Biotechnology*, **11**, 1271.
33. Pack, P., Müller, K., Zahn, R., and Plückthun, A. (1995). *J. Mol. Biol.*, **246**, 28.
34. Glockshuber, R., Schmidt, T., and Plückthun, A. (1992). *Biochemistry*, **31**, 1270.
35. Better, M., Chang, C. P., Robinson, R. R., and Horwitz, A. H. (1988). *Science*, **240**, 1041.

36. Skerra, A. and Plückthun, A. (1988). *Science*, **240**, 1038.
37. Bardwell, J. (1994). *Mol. Microbiol.*, **14**, 199.
38. Colcher, D., Bird, R., Roselli, M., Hardman, K. D., Johnson, S., Pope, S., Dodd, S. W., Pantoliano, M. W., Milenic, D. E., and Schlom, J. (1990). *J. Natl Cancer Inst.*, **82**, 1191.
39. Gibbs, R. A., Posner, B. A., Filpula, D. R., Dodd, S. W., Finkelman, M. A. J., Lee, T. K., Wroble, M., Whitlow, M., and Benkovic, S. J. (1991). *Proc. Natl Acad. Sci. USA*, **88**, 4001.
40. Whitlow, M. and Filpula, D. (1991). *Methods: a companion to Methods in enzymology* **2**, 97.
41. Proba, K., Ge, L., and Plückthun, A. (1995). *Gene*, **159**, 203.
42. Derman, A. I., Prinz, W. A., Belin, D., and Beckwith, J. (1993). *Science*, **262**, 1744.
43. Freund, C., Ross, A., Plückthun, A., and Holak, T. A. (1994). *Biochemistry*, **33**, 3296.
44. Buchner, J. and Rudolph, R. (1991). *Biotechnology*, **9**, 157.
45. Rudolph, R. (1990). In *Modern methods in protein and nucleic acid research* (ed. H. Tschesche, H.), pp. 149–71. Walter de Gruyter, Berlin.
46. Pugsley, A. P. (1993). *Microbiol. Rev.*, **57**, 50.
47. Wülfing, C. and Plückthun, A. (1994). *Mol. Microbiol.*, **12**, 685.
48. Meerman, H. J. and Georgiou, G. (1994). *Biotechnology*, **12**, 1107.
49. Wülfing, C. and Plückthun, A. (1994). *J. Mol. Biol.*, **242**, 655.
50. Wülfing, C. and Plückthun, A. (1993). *Gene*, **136**, 199.
51. Nishihara, T., Iwabuchi, T., and Nohno, T. (1994). *Gene*, **145**, 145.
52. Reznikoff, W. S. (1992). *Mol. Microbiol.*, **6**, 2419.
53. Knaus, R. and Bujard, H. (1990). In *Nucleic acids and molecular biology* (ed. F. Eckstein and D. M. J. Lilley), Vol. 4, pp. 110. Springer Verlag, Berlin.
54. Lindner, P., Guth, B., Wülfing, C., Krebber, C., Steipe, B., Müller, F., and Plückthun, A. (1992). *Methods: a companion to Methods in enzymology* **4**, 41.
55. Munro, S. and Pelham, H. R. B. (1986). *Cell*, **46**, 291.
56. Thisted, T., Nielsen, A. K., and Gerdes, K. (1994). *EMBO J.*, **13**, 1950.
57. Dotto, G. P., Horiuchi, K., and Zinder, N. D. (1984). *Adv. Exp. Med. Biol.*, **179**, 185.
58. Lin-Chao, S., Chen, W. T., and Wong, T. T. (1992). *Mol. Microbiol.*, **6**, 3385.
59. Holmgren, A. (1989). *J. Biol. Chem.*, **264**, 13963.
60. Studier, F. W., Rosenberg, A. H., Dunn, J. J., and Dubendorff, J. W. (1990). In *Methods in Enzymology* (ed. D. V. Goeddel), Vol. 185, pp. 60. Academic Press, San Diego.
61. Carter, P., Kelley, R. F., Rodrigues, M. L., Snedecor, B., Covarrubias, M., Velligan, M. D., Wong, W. L. T., Rowland, A. M., Kotts, C. E., Carver, M. E., Yang, M., Bourell, J. H., Shepard, H. M., and Henner, D. (1992). *Biotechnology*, **10**, 163.
62. Ayala, M., Balint, R. F., Fernandezdecossio, M. E., Canaanhaden, L., Larrick, J. W., and Gavilondo, J. V. (1995). *Biotechniques*, **18**, 832.
63. Tormo, A., Almiron, M., and Kolter, R. (1990). *J. Bacteriol.*, **172**, 4339.
64. Liu, J. and Walsh, C. T. (1990). *Proc. Natl Acad. Sci. USA*, **87**, 4028.
65. Hockney, R. C. (1994). *Trends Biotechnol.*, **12**, 456.
66. Knappik, A., Krebber, C., and Plückthun, A. (1993). *Biotechnology*, **11**, 77.
67. Duenas, M., Vazquez, J., Ayala, M., Soderlind, E., Ohlin, M., Perez, L., Borrebaeck, C. A., and Gavilondo, J. V. (1994). *Biotechniques*, **16**, 476.
68. Bowden, G. A. and Georgiou, G. (1988). *Biotech. Prog.*, **4**, 97.
69. Sawyer, J. R., Schlom, J., and Kashmiri, S. V. S. (1994). *Prot. Eng.*, **7**, 1401.

70. Blackwell, J. R. and Horgan, R. (1991). *FEBS Lett.*, **295**, 10.
71. Bailey, J. E. and Ollis, D. F. (1986). *Biochemical engineering fundamentals*. McGraw-Hill Book Company, Singapore.
72. Riesenberg, D. (1991). *Curr. Opin. Biotechnol.*, **2**, 380.
73. Kleman, G. L. and Strohl, W. R. (1992). *Curr. Opin. Biotechnol.*, **3**, 93.
74. Kleman, G. L. and Strohl, W. R. (1994). *Curr. Opin. Biotechnol.*, **5**, 180.
75. Brown, T. A. (1991). In *Molecular biology LABFAX series* (ed. B. D. Hames and D. Rickwood), p. 6. Bios Scientific Publishers. Oxford.
76. Pfaff, M., Wagner, E., Wenderoth, R., Knüpfer, U., Guthke, R., and Riesenberg, D. (1995). In *Proceedings 6th International Conference on Computer Application in Biotechnology—CAB6* (ed. A. Munack and K. Schügerl), p. 6. IFAC Publications Elsevier Science Ltd., Oxford.
77. Riesenberg, D., Menzel, K., Schulz, V., Schumann, K., Veith, G., Zuber, G., and Knorre, W. A. (1990). *Appl. Microbiol. Biotechnol.*, **34**, 77.
78. Riesenberg, D., Schulz, V., Knorre, W. A., Pohl, H.-D., Korz, D., Sanders, E. A., Roβ, A., and Deckwer, W.-D. (1991). *J. Biotechnol.*, **20**, 17.
79. Hellmuth, K., Korz, D. J., Sanders, E. A., and Deckwer, W.-D. (1994). *J. Biotechnol.*, **32**, 289.
80. Strandberg, L., Andersson, L., and Enfors, S.-O. (1994). *FEMS Microbiol. Rev.*, **14**, 53.
81. Yee, L. and Blanch, H. W. (1993). *Biotechnol. Bioeng.*, **41**, 781.
82. Hahm, D. H., Pan, J., and Rhee, J. S. (1994). *Appl. Microbiol. Biotechnol.*, **42**, 100.
83. Kleman, G. L. and Strohl, W. R. (1994). *Appl. Environ. Microbiol.*, **60**, 3952.
84. Dedhia, N. N., Hottiger, T., and Bailey, J. E. (1994). *Biotechnol. Bioeng.*, **44**, 132.
85. San, K.-Y., Bennett, G. N., Aristidou, A. A., and Chou, C.-H. (1994). *Ann. NY Acad. Sci.*, **721**, 257.
86. Bauer, K. A., Ben-Bassat, A., Dawson, M., De La Puente, V. T., and Neway, J. O. (1990). *Appl. Environ. Microbiol.*, **56**, 1296.
87. Korz, D., Hellmuth, K., Sanders, E. A., Deckwer, W.-D., Knorre, W. A, and Riesenberg, D. (1991). *Proceedings of Strategies 2000—Fourth World Congress of Chemical Engineering*. p. 717, Brönners Breidenstein, Frankfurt (M).
88. Riesenberg, D., Pohl, H.-D., Schroeckh, V., and Knorre, W. A. (1994). In *ECB6: Proceedings of the 6th European Congress on Biotechnology* (ed. L. Alberghina, L. Frontali, and P. Sensi), p. 817. Elsevier Science BV, Amsterdam.
89. Elia, M. and Jennings, G. (1995). In *Physiological and clinical aspects of short-chain fatty acids* (ed. J. H. Cummings, J. L. Rombeau, and T. Sakata), p. 35. Cambridge University Press.
90. Akerstrom, B., Nilson, B. H., Hoogenboom, H. R., and Bjorck, L. (1994). *J. Immunol. Methods*, **177**, 151.
91. Nygren, P. A., Stahl, S., and Uhlen, M. (1994). *Trends Biotechnol.*, **12**, 184.
92. Porath, J. (1992). *Protein Expr. Purif.*, **3**, 263.
93. VanBogelen, R. A., Sankar, P., Clark, R. L., Bogan, J. A., and Neidhardt, F. C. (1992). *Electrophoresis*, **13**, 1014.
94. Afeyan, N. B., Fulton, S. P., Gordon, N. F., Maszaroff, I., Varady, L., and Regnier, F. E. (1990). *Biotechnology*, **8**, 203.