Appl Microbiol Biotechnol (1996) 46: 524–532

ORIGINAL PAPER

U. Horn · W. Strittmatter · A. Krebber · U. Knüpfer
M. Kujau · R. Wenderoth · K. Müller · S. Matzku
A. Plückthun · D. Riesenberg

High volumetric yields of functional dimeric miniantibodies in *Escherichia coli*, using an optimized expression vector and high-cell-density fermentation under non-limited growth conditions

Received: 26 February 1996 / Received revision: 1 August 1996 / Accepted: 12 August 1996

Abstract Functional bivalent miniantibodies, directed against the epidermal growth factor receptor, accumulated to more than 3 gl^{-1} in high-cell-density cultures of *Escherichia coli* RV308(pHKK) on a pilot scale. The miniantibodies consist of scFv fragments with a C-terminal hinge followed by a helix-turn-helix motif, which homodimerizes in vivo. The improved expression vector pHKK is characterized by the *hok/sok* suicide system, improving plasmid maintenance, and the inducible *lac p/o* promoter system with the very strong T7g10 Shine-Dalgarno sequence. The expression unit is flanked by terminators. The prototrophic RV308 cells were cultivated in glucose mineral salt medium and reached a cell density of 145 g dry biomass l^{-1} after 33 h. After induction, growth continued almost unchanged for a further 4 h with concomitant miniantibody formation. In the fed-batch phase, the concentration of glucose was kept almost constant at the physiological level of approximately 1.5 g l^{-1}, using on-line flow injection analysis for control. Surprisingly, *E. coli* RV308(pHKK) did not accumulate significant amounts of the metabolic by-product acetate under these unlimited aerobic growth conditions.

U. Horn, U. Knüpfer, M. Kujau, R. Wenderoth,
D. Riesenberg (✉)
Hans-Knöll-Institut für Naturstoff-Forschung,
Beutenbergstraße 11,
D-07745 Jena, Germany
Fax: + 0049 3641 65 6800
E-mail: diersenb@leutra.imb-jena.de

W. Strittmatter, S. Matzku
Merck KGaA, Med Chem Bioorganica,
Frankfurter Straße 250, D-64271 Darmstadt, Germany

A. Krebber, K. Müller, A. Plückthun
Biochemisches Institut der Universität Zürich,
Winterthurer Str. 190, CH-8057 Zürich, Switzerland

Introduction

Antibodies are needed in very large amounts for many medical or biotechnological applications. In cancer therapy, for instance, doses of 1 g/patient are commonplace (Kuzel and Rosen 1994). *Escherichia coli* proved to be an appropriate host for the expression of antibody fragments, combining ease of manipulation with high transformation efficiency, which is crucial for working with libraries, and high-volume yields of fully functional antibody fragments in several reported cases (see below). In this paper, we describe a new fermentation strategy and an improved vector which, when applied to the expression of a bivalent miniantibody directed against the epidermal growth factor EGF receptor, yielded more than 3 g l^{-1} fully functional protein.

While the early work with recombinant antibodies in *E. coli* has concentrated on monovalent antibody fragments such as Fv, single-chain Fv and Fab, a whole range of fusion proteins and multimeric and multispecific variants has more recently been constructed. These variants combine small size with high avidity and hence potentially very interesting molecular properties (Haber 1992; Plückthun 1992, 1994; Huston et al. 1993a,b; Fanger 1995; Pack et al. 1995; Renner and Pfreundschuh 1995).

There are currently four different approaches used to produce antibody fragments in *E. coli*. The formation of disulfide bonds is crucial for the stability of immunoglobulin domains and must thus be achieved either in vivo or in vitro (Glockshuber et al. 1992) whichever approach is used. The first approach involves the secretion of the fragments into the oxidizing milieu of the periplasm, where native molecules can be obtained (Skerra and Plückthun 1988; Better et al. 1988). However, a certain percentage of the antibody, which is dependent on the antibody fragment, will aggregate and precipitate. The second approach, therefore, is to isolate this insoluble portion from the periplasm and refold it in vitro (Whitlow and Filpula 1991). Thirdly, the protein

can be functionally expressed in the cytoplasm without a signal sequence, but in this case disulfide bonds can only form in *trxB*⁻mutants (Derman et al. 1993; Proba et al. 1995). The fourth approach is to express the antibody in insoluble form in the cytoplasm and to refold this material in vitro (Buchner and Rudolph 1991; Huston et al. 1991; Freund et al. 1993).

When comparing these strategies, the cell density, the amount of antibody produced per cell, whether refolding is necessary and, if so, the yield thereof must be taken into account. Furthermore, the primary sequence of the antibody plays a crucial role in determining the yield of in vivo and in vitro folding (Knappik and Plückthun 1995) making comparisons of different antibodies almost impossible. For example, several Fab fragments have been expressed as insoluble cytoplasmic or periplasmic aggregates and refolded in vitro. Yields of 0.14 g l^{-1} at low cell density (Condra et al. 1990) to 1–2 g l^{-1} insoluble antibody at medium cell density were obtained (Shibui et al. 1993) and a maximal refolding yield of about 47% has been reported, but refolding yields are usually in the 5%–20% range.

Clearly, if high-productivity processes could be designed that *directly* lead to folded and functional antibody, these would be superior to strategies involving refolding. Several Fab fragments have previously been secreted into the periplasm with volumetric yields of 0.2–0.7 g l^{-1} (Better et al. 1993) and 1–2 g l^{-1} (Carter et al. 1992). In the latter case an antibody with very favorable folding properties was produced (Knappik and Plückthun 1995). Bivalent miniantibodies (Pack et al. 1993) have also been produced in functional form at 0.2 g l^{-1}. However, these systems cannot be directly compared since different antibodies were produced and they will only indicate the range of yields accessible with *E. coli*.

For the secretion systems previously described for use in fermentation, a variety of different promoter systems have been used successfully, including the *araBAD* promoter in the presence of the *araC* repressor gene (induced by arabinose) (Better et al. 1993), the *phoA* promoter (induced by phosphate starvation) (Carter et al. 1993) and the *lac* promoter in the presence of the *lacI* repressor gene (induced by isoprophyl β-D-thiogalactoside, IPTG) (Pack et al. 1993).

Because of the convenient transfer of the *lac* system from laboratory shake-flasks to pilot-scale conditions, we chose to optimize this system. A problem previously observed with this system was the basal level of expression prior to induction, which is a stress for the cell and may lead to growth imbalances. In addition, plasmid loss occurred frequently in the production phase after IPTG induction. In this paper, we describe an optimized expression vector, designed to solve both of these problems. Furthermore, we describe an improved high-cell-density cultivation (HCDC) technique that allows unlimited growth of a strain that produces low amounts of the detrimental metabolic by-product acetate (Pan et al. 1987; Rinas et al. 1989) thus allowing increased recombinant protein production (Bauer et al. 1990).

Materials and methods

Strain and vector

The prototrophic *E. coli* K12 strain RV308 (*lac*74-*gal*ISII::OP308-*strA*) (Maurer et al. 1980; ATCCno. 31608), harboring pHKK, was used for expression of miniantibodies. DNA manipulations were based on standard methodology (Sambrook et al. 1989). Plasmid-free *E. coli* RV308 cells from a mock high-cell-density fermentation were used as controls in sodium dodecyl sulfate/polyacrylamide gel electrophoresis (SDS-PAGE) gels (see below).

Construction of the improved expression vector for HCDC

The EGF-receptor- specific, murine antibody mAb425 has been described previously (Rodeck et al. 1987). The genes were cloned for the heavy- and light-chain variable regions of the antibody mAb425 (ATCC HB9629) (Kettleborough et al. 1991). The genes for the murine immunoglobulin variable regions, V_H and V_L, were captured by the polymerase chain reaction (PCR) and linked together by PCR assembly (Clackson et al. 1991; Kettleborough et al. 1994) using a $(Gly_4Ser)_3$ linker (Bendig and Kettleborough, unpublished). A further PCR step was used to introduce restriction sites (*Not*I and *Sfi*I) necessary to clone the scFv gene into the pHEN1 vector (Hoogenboom et al. 1991). To enable the secretion of the $scFv_{425}$dhlx fragment into the periplasm, the V_H domain was N-terminally fused to the *pel*B signal peptide sequence. In an additional step, the designed helix-turn-helix (dhlx) dimerization domain (Pack et al. 1993) was fused C-terminally to V_L via *Eco*RI and *Hind*III sites. The final $scFv_{425}$dhlx expression cassette was cloned between the unique *Xba*I and *Hind*III sites of the pTHS vector, resulting in pHKK (Fig. 1).

The vector pHKK was constructed as follows: the small *Mlu*I-*Xba*I fragment from pAK100 (Krebber and Plückthun, unpub-

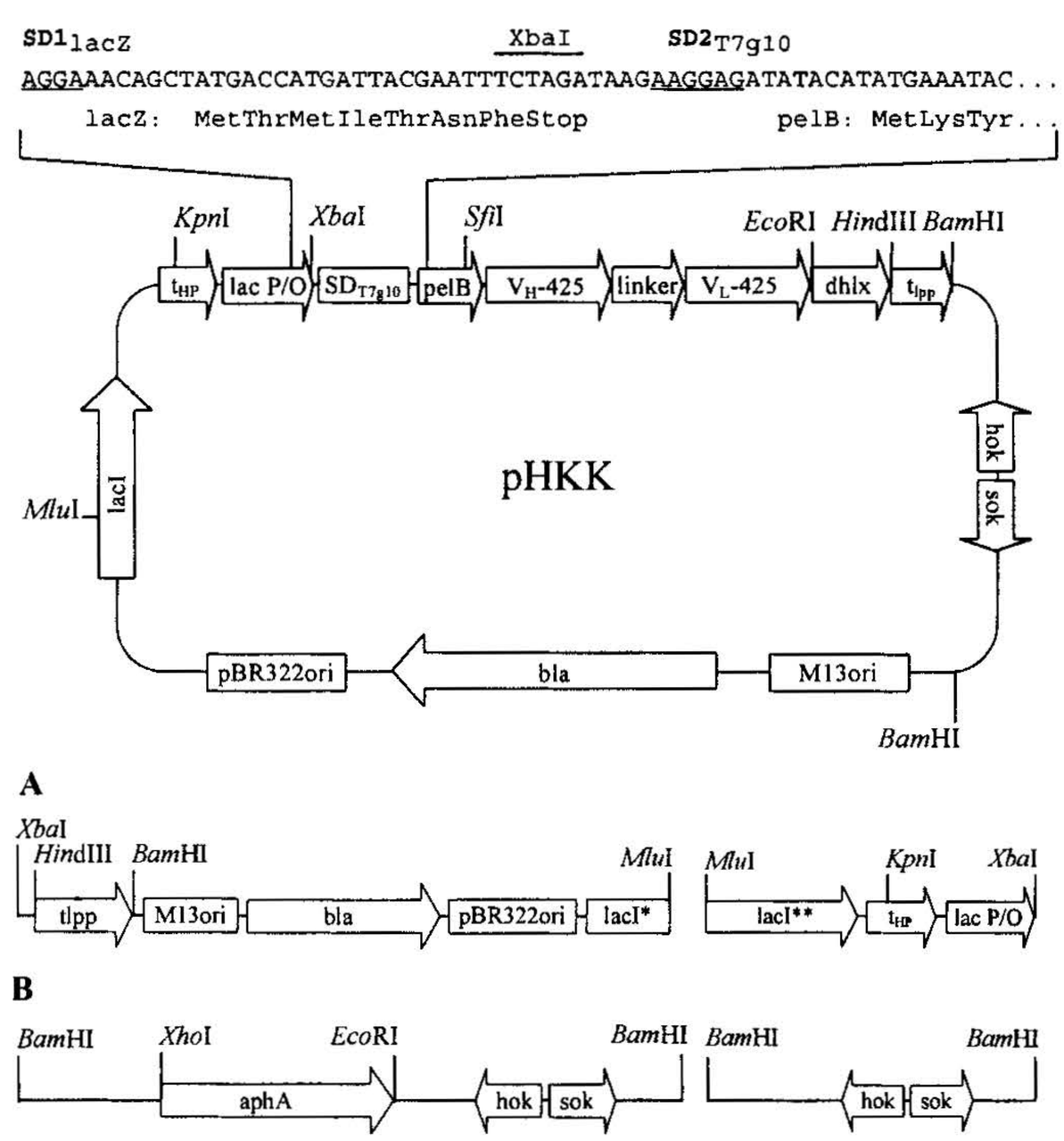

Fig. 1A, B Optimized expression vector pHKK and fragments for its construction. **A** Large *Mlu*I-*Xba*I fragment from pASK40 and small *Mlu*I-*Xba*I fragment from pAK100. **B** *Bam*HI fragment from pKG1022 and its Δ*aph*A derivative. Details are given in the text

lished), containing the strong transcriptional terminator t_{HP} (Nohno et al. 1988) in the upstream region of *lac p/o*, was inserted into pASK40 (Skerra et al. 1991), resulting in pTAS (Fig. 1, A). The insertion of the *hok/sok* DNA in pTAS was achieved by two cloning steps: the *aphA* gene of pKG1022 (Gerdes 1988) was removed by double digestion with *Xho*I and *Eco*RI, filled with DNA polymerase I (Klenow fragment) and religated (Fig. 1B). In the second step the modified *Bam*HI fragment of pKG1022 was cloned into the unique *Bam*HI site of the first cloning product (Fig. 1A) resulting in pTHS. The upper part of Fig. 1 shows in detail the tandem ribosome-binding site (underlined) which includes a short *lac*Z coding sequence with a first Shine-Dalgarno (SD) sequence, derived from pASK40, followed by a strong SD sequence, t7g10, preceding the *pelB* signal sequence. This region was cloned by PCR into the *Xba*I and *Sfi*I sites.

Media and feeding solutions

The compositions of the media for the precultures in conical flasks and the main culture in the stirred-tank reactor Biostat ED10 and of the three feeding solutions (FS1, FS2 and FS3) are given in Table 1. The main culture medium was modified from the medium described by Riesenberg et al. (1991). To prevent precipitation, the components were added in the order listed in Table 1 (for the precultures: to 80 ml H_2O, then sterile water was added to 100 ml before autoclaving; for the main culture: to 6 l H_2O, then sterile water was added to 8 l minus the inoculum volume before autoclaving). Glucose and $MgSO_4 \cdot 7H_2O$ were added as separate, autoclaved solutions. The pH of the main culture medium was then adjusted to 6.8 using 25% (v/v) aqueous ammonia; 25% (v/v) NH_3 (for pH regulation) and Ucolub N115 (as antifoam reagent) (Fragol Industrieschmierstoff GmbH, Mülheim/Ruhr, Germany) were added by sensor control throughout the fermentation. FS1, FS2 and FS3 were supplied to the culture in the fed-batch phase. FS1 was prepared as follows: 750 g glucose was dissolved in 600 ml H_2O and 22.2 g $MgSO_4 \cdot 7H_2O$ in 50 ml H_2O. After autoclaving, the two solutions were mixed. A 1-l solution of FS2 was prepared by dissolving 227 g $(NH_4)_2HPO_4$ and 169.5 g $(NH_4)H_2PO_4$ in H_2O and adding approximately 60 ml 25%(v/v) NH_3 to adjust the pH to 6.8 before autoclaving. FS3 (63 ml) was prepared from stock solutions in the following order: 50 ml Fe(III) citrate hydrate (6 g l^{-1}), 0.5 ml H_3BO_3 (30 g l^{-1}), 0.5 ml $MnCl_2 \cdot 4H_2O$ (10 g l^{-1}), 0.5 ml EDTA$\cdot 2H_2O$ (84 g l^{-1}), 0.5 ml $CuCl_2 \cdot 2H_2O$ (15 g l^{-1}), 0.5 ml $Na_2MoO_4 \cdot 2H_2O$ (25 g l^{-1}), 0.5 ml $CoCl_2 \cdot 2H_2O$ (25 g l^{-1}) and 10 ml $Zn(CH_3COO)_2 \cdot 2H_2O$ (4 g l^{-1}).

Fig. 2 Experimental set-up of the stirred bioreactor (*upper panel*) with the system for on-line measurement, monitoring and control of the concentration of glucose in high-cell-density cultures (HCDC) (*middle panel*) as well as the system for on-line measurement and monitoring of the concentration of ammonium N in HCDC (*lower panel*). For further explanation see text.*DCU* digital measurement and control unit, *FIA* flow injection analysis

Low-cell-density culture conditions in shake flasks for precultures

Several colonies from a petri dish, grown overnight on Luria-Bertani (LB) medium/agar at 26 °C, were used to inoculate 20 ml liquid LB medium in a small flask. After shaking for 5 h (200 rpm, 26 °C), about 1 ml was transferred to 100 ml preculture medium in 500-ml flasks and incubated further at 200 rpm, 26 °C overnight. A 10-ml sample of this preculture 1 was used to inoculate each of several 100-ml samples of new preculture media in 500-ml flasks for preculture 2. Altogether about nine parallel precultures, grown to $A_{550} \approx 1.5$, were used to inoculate 8 l main culture medium in the fermentor to an initial $A_{550} \approx 0.2$.

HCDC conditions in the 10-l bioreactor for the main culture

The set-up of the stirred bioreactor with accessories and controls is shown in Fig. 2. The cultivation was performed in the 10-l bioreactor Biostat ED10 with a digital measurement and control unit, a multifermentor control system and a gas-flow-ratio controller from B. Braun Biotech International (Melsungen,Germany). The exhaust gas stream was continuously measured with a Uras 10E unit for carbon dioxide and with a Magnos 6G unit for oxygen (Hartmann & Braun, Frankfurt/M, Germany). After inoculation, the biosampler MX-3 (New Brunswick Scientific, Watford, UK; not included in Fig. 2) served for automatic aseptic sampling and off-line data analysis (Webb et al. 1990). The control circuits maintained an inlet gas flow rate of 10 l min^{-1}, a pH of 6.8, a temperature of 26 °C and a pressure of 0.15 MPa. Two control loops (PO_2 stirrer speed and PO_2 gas flow ratio) guaranteed aerobic growth conditions at a PO_2 of 20% saturation. Throughout the cultivation, pH, temperature, pressure, stirrer speed, total gas flow rate, air flow rate, oxygen flow rate and molar fractions of O_2 and CO_2 in the exit gas were continuously monitored and recorded.

Table 1 Final concentration of media and feeding solutions

Compound	Preculture medium	Main culture medium	Feeding solution FS1	Feeding solution FS2	Feeding solution FS3
1. $Na_2HPO_4 \cdot 2H_2O$	8.6 g l^{-1}				
2. KH_2PO_4	3.0 g l^{-1}	16.6 g l^{-1}			
3. $(NH_4)_2HPO_4$		4.0 g l^{-1}		227.0 g l^{-1}	
4. $(NH_4)H_2PO_4$				169.5 g l^{-1}	
5. NH_4Cl	1.0 g l^{-1}				
6. NaCl	0.5 g l^{-1}				
7. Citric acid		2.1 g l^{-1}			
8. Fe(III) citrate hydrate	60.0 mg l^{-1}	75.0 mg l^{-1}			5 g l^{-1}
9. H_3BO_3	3.0 mg l^{-1}	3.8 mg l^{-1}			250 mg l^{-1}
10. $MnCl_2 \cdot 4H_2O$	15.0 mg l^{-1}	18.8 mg l^{-1}			125 mg l^{-1}
11. EDTA$\cdot 2H_2O$	8.4 mg l^{-1}	10.5 mg l^{-1}			700 mg l^{-1}
12. $CuCl_2 \cdot 2H_2O$	1.5 mg l^{-1}	1.9 mg l^{-1}			125 mg l^{-1}
13. $Na_2MoO_4 \cdot 2H_2O$	2.5 mg l^{-1}	3.1 mg l^{-1}			213 mg l^{-1}
14. $CoCl_2 \cdot 6H_2O$	2.5 mg l^{-1}	3.1 mg l^{-1}			213 mg l^{-1}
15. $Zn(CH_3COO)_2 \cdot 2H_2O$	8.0 mg l^{-1}	10.0 mg l^{-1}			668 mg l^{-1}
Glucose	10.0 g l^{-1}	25.0 g l^{-1}	669.6 g l^{-1}		
$MgSO_4 \cdot 7H_2O$	0.6 g l^{-1}	1.5 g l^{-1}	19.8 g l^{-1}		
Ampicillin	0.1 g l^{-1}	0.1 g l^{-1}			

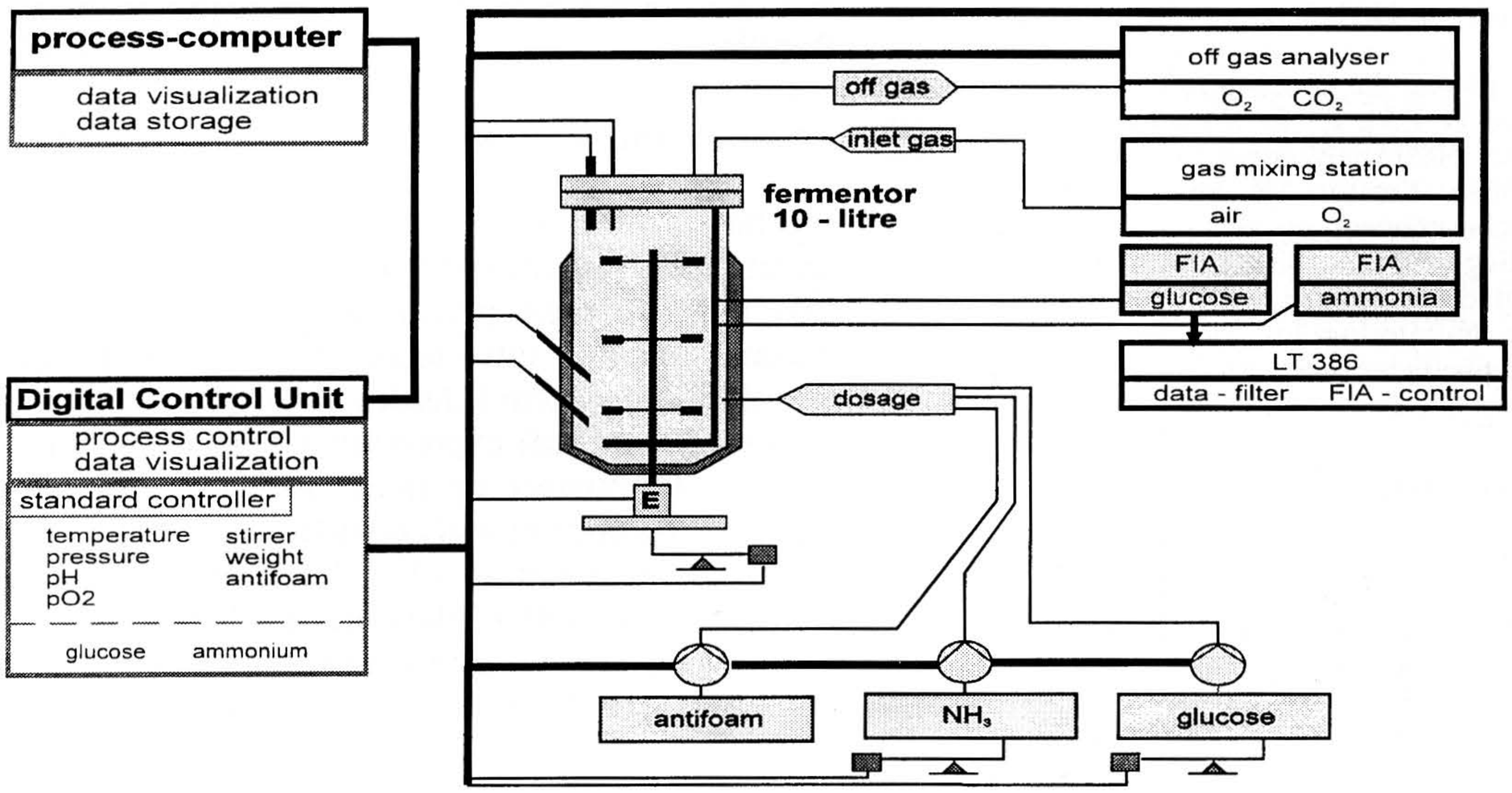
process-computer
data visualization
data storage
Digital Control Unit
process control
data visualization
standard controller
temperature
pressure
pH
pO2
stirrer
weight
antifoam
glucose
ammonium
off gas
inlet gas
fermentor
10 - litre
dosage
E
off gas analyser
O2 CO2
gas mixing station
air O2
FIA
glucose
FIA
ammonia
LT 386
data - filter FIA - control
antifoam
NH3
glucose

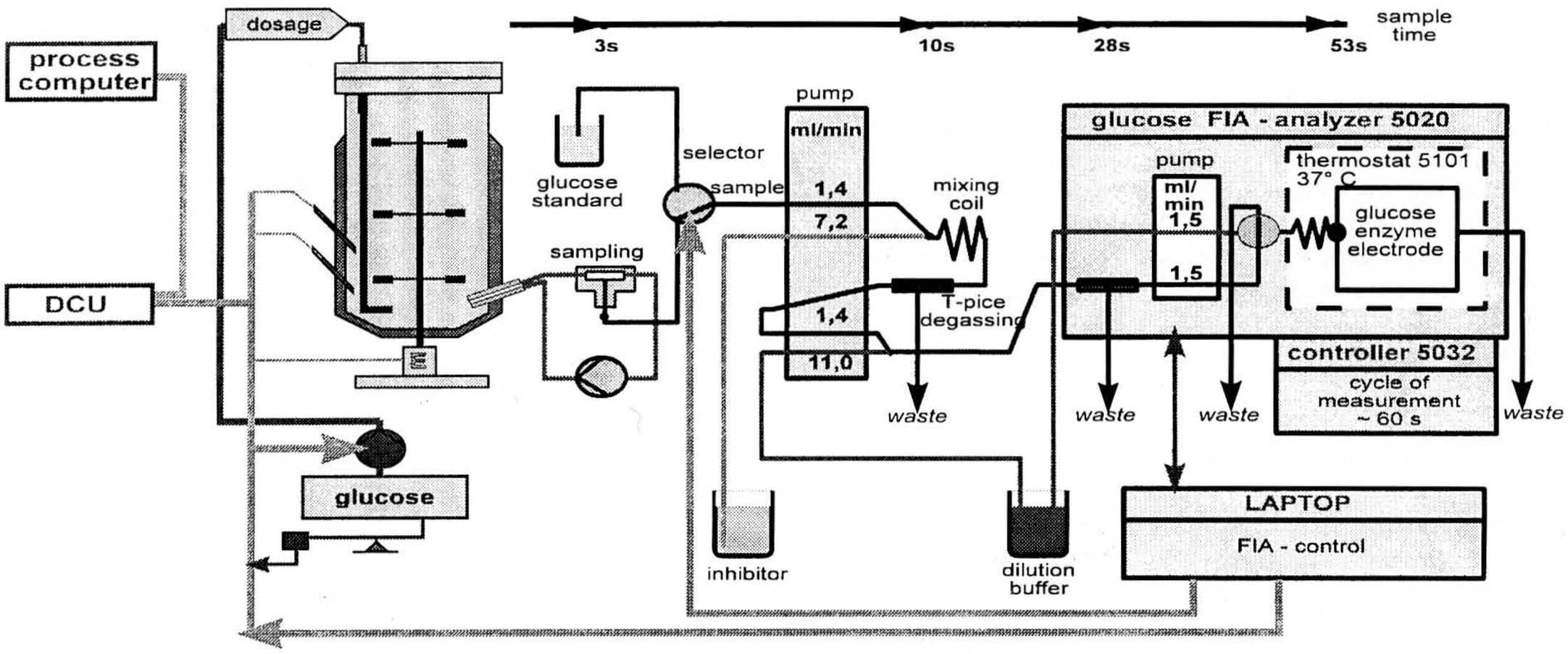
process computer
DCU
dosage
glucose
3s
10s
28s
53s
sample time
glucose standard
selector
sample
sampling
pump
ml/min
1,4
7,2
1,4
11,0
mixing coil
T-pice degassing
waste
inhibitor
dilution buffer
glucose FIA - analyzer 5020
pump
ml/min
1,5
1,5
thermostat 5101
37° C
glucose enzyme electrode
controller 5032
cycle of measurement ~ 60 s
waste
waste
waste
waste
LAPTOP
FIA - control

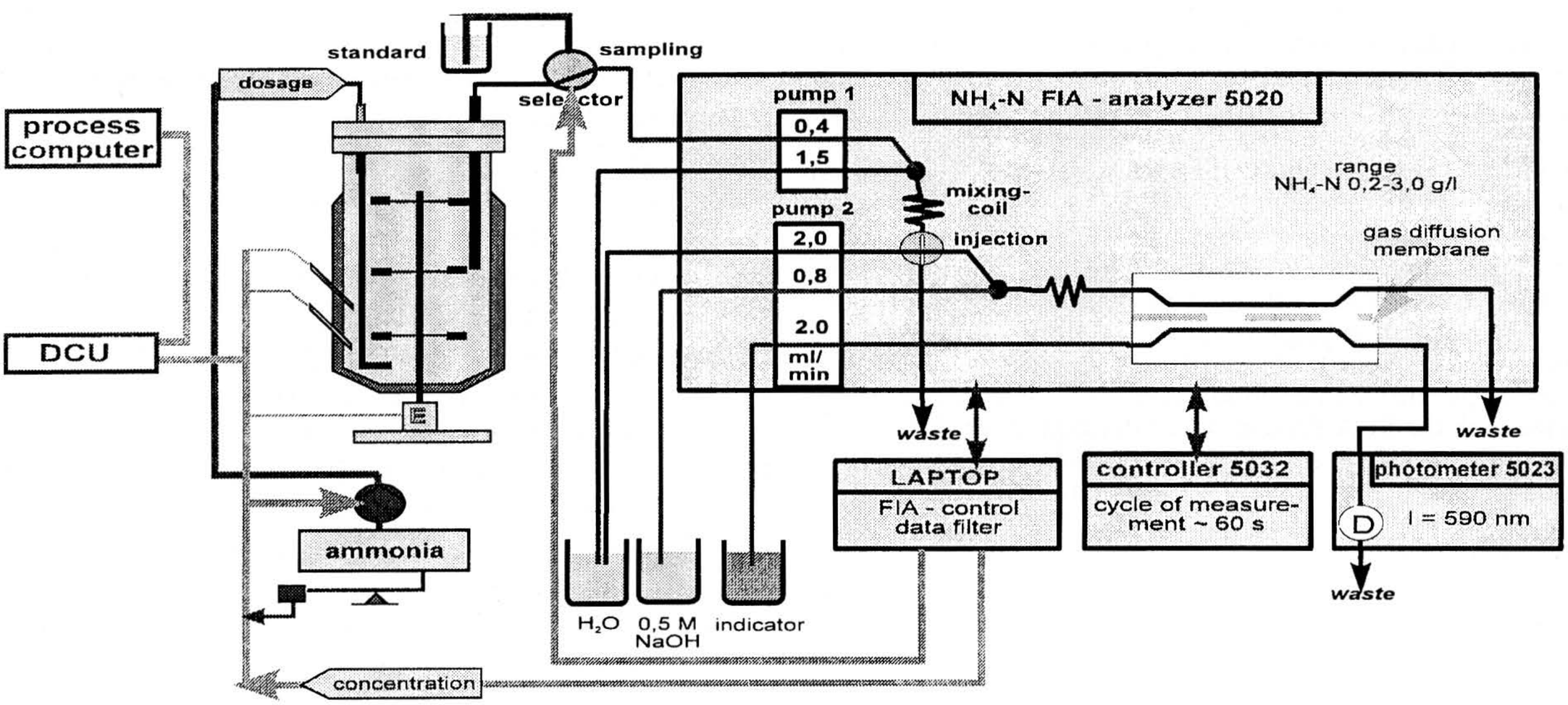
standard
sampling
selector
dosage
process computer
DCU
ammonia
pump 1
0,4
1,5
pump 2
2,0
0,8
2.0
ml/min
NH4-N FIA - analyzer 5020
range
NH4-N 0,2-3,0 g/l
mixing-coil
injection
gas diffusion membrane
waste
waste
waste
LAPTOP
FIA - control
data filter
controller 5032
cycle of measurement ~ 60 s
photometer 5023
D
l = 590 nm
H2O
0,5 M NaOH
indicator
concentration

On-line control of glucose in HCDC

During the fed-batch phase, the concentration of glucose in the culture was maintained at 1.5 g l^{-1} by a modified flow injection analysis device (FIAstar 5020Analyzer with photometer 5023 and detection controller 5032, Tecator AB, Sweden). The sampling system, the on-line measurement of glucose, the regulation of glucose level and feeding device are shown in the middle panel of Fig. 2. Details of the glucose flow injection analysis and the model-aided on-line glucose monitoring for the computer controlled HCDC have been described elsewhere (Pfaff et al. 1995).

On-line measurement of ammonia nitrogen in HCDC

The accessory system for the measurement of the concentration of ammonium nitrogen is illustrated in the lower panel of Fig. 2. The sample filter PP19 (abc GmbH, Puchheim, Germany) served for sampling. This sampler connects the bioreactor and the FIA. Culture samples were diluted and injected into the flow injection analyzer. Ammonium nitrogen was measured according to the method ASN 50-04/92 from Tecator.

Off-line data analysis in HCDC

Cell density was calculated from the absorbance (A_{550}) measured with a Novaspec II spectrophotometer (Pharmacia LKB) in a 1-cm-light-path cuvette either directly or after dilution of the culture with 0.9% NaCl solution. Cell dry weight (biomass) X (g l^{-1}) was calculated on the basis of a calibration curve according to X=0.36 A_{550}. The supernatant of centrifuged samples served for the analysis of acetate (with test kit 148261 from Boehringer, Mannheim, Germany), phosphate (with Spectroquant 14842 from E. Merck, Darmstadt, Germany) and glucose (with analyzer ESAT 6660 from Prüfgerätewerk Medingen GmbH, Freital, Germany). The segregation stability of expression plasmids was determined as the percentage of plasmids harboring cells in the population as a function of cultivation time, according to Pack et al. (1993).

Quantitative determination of the miniantibodies

The sample preparation was carried out as described by Pack et al. (1993). The amounts of *functional* miniantibodies were determined by a functional enzyme-linked immunosorbant assay (ELISA). Maxisorp microtiter plates (Nunc) were coated with human EGF receptor. The bound miniantibodies were detected with rabbit anti-scFv425 serum and peroxidase-conjugated goat anti-(rabbit IgG) (Jackson Immunoresearch Inc., West Grove, USA). The yield of active miniantibodies was calculated from a dilution series of the purified miniantibodies. As a control, it was shown that the anti-scFv425 rabbit serum showed no detectable crossreactivity with other components of plasmid-free *E. coli* RV308 crude extract. Furthermore, the addition of *E. coli* RV308 crude extract to a dilution series of the same miniantibodies in purified form had no effect on the ELISA signals.

For the determination of *total* amounts of miniantibodies, SDS-PAGE (Laemmli 1970) was carried out in 12% polyacrylamide, stained with Coomassie brilliant blue and scanned. The concentration of miniantibodies was calculated from a dilution series of purified miniantibodies separated on the same gel. The concentration of purified miniantibody in the standard solution was determined with the BCA Protein Assay Reagent kit (23225×) from Pierce according to Smith et al. (1985) using bovine serum albumin (Pierce) as standard. As a control we simultaneously separated by SDS-PAGE the whole plasmid-free *E. coli* RV308 crude extract from a mock HCDC.

Results

Construction of an optimized vector for HCDC

We have introduced into the standard expression and secretion vectors for antibodies in *E. coli* several features that improve their performance in HCDC. To avoid plasmid loss, we introduced the *hok/sok* postsegregational killing system (Gerdes 1988; Thisted et al. 1994). To lower the basal expression before induction, we inserted a terminator upstream of the *lac p/o*, thus decreasing transcriptional read-through from upstream genes (A. Krebber et al. submitted). Finally, we increased the strength of the tandem ribosome-binding site by changing the second site into the T7g10 site, which is known to be extremely strong (Mertens et al. 1995).

Construction of the anti-(EGF receptor) miniantibody

The anti-(EGF receptor) miniantibody was constructed from a chimeric form of the antibody 425. The antibody was chimerized using standard methodology and the scFv was assembled in the orientation VH-linker-VL (Kettleborough et al. 1994). To construct the bivalent miniantibody, the scFv was fused to a hinge region and the helix-turn-helix module (Pack et al. 1993). This miniantibody is secreted into the periplasm of *E. coli* where it assembles to a native, bivalent form.

Growth and miniantibody formation during HCDC

E. coli RV308(pHKK) was cultivated in only 33 h from A_{550}=0.2 over 11 doublings to an A_{550}= 400, corresponding to a final biomass of 145 g dry weight l^{-1} (Fig. 3). This was possible since the cells could grow both in the batch phase and in the fed-batch phase almost at their maximal growth rate without any substrate limitations. Throughout the whole fermentation, the metabolic by-product acetate accumulated only to 1.5 g l^{-1}, which did not inhibit growth. For over 9 doublings of biomass, the specific growth rate of the culture remained nearly at its maximum ($\mu = \mu_{max}$). It was lower than μ_{max} only for a short period directly after inoculation – because of cellular adaptation – and during the late production phase owing to growth inhibition by the miniantibodies synthesized. The maximum total yield of the EGF-receptor-specific bivalent miniantibodies (scFv425dhlx) was 4.1 g l^{-1} (Fig. 4). About 80% of these miniantibodies were functional.

Details of the HCDC are shown in Figs. 3, 4. The batch phase consisted of three sub-phases. After inoculation with an exponentially growing preculture, a lag phase occurred, characterized by the adaptation of the cells and the increase of μ to μ_{max} (sub-phase I). In sub-phase II, the cells grew exponentially at $\mu=\mu_{max}$. After a decrease of the PO_2 below 20% of saturation, the

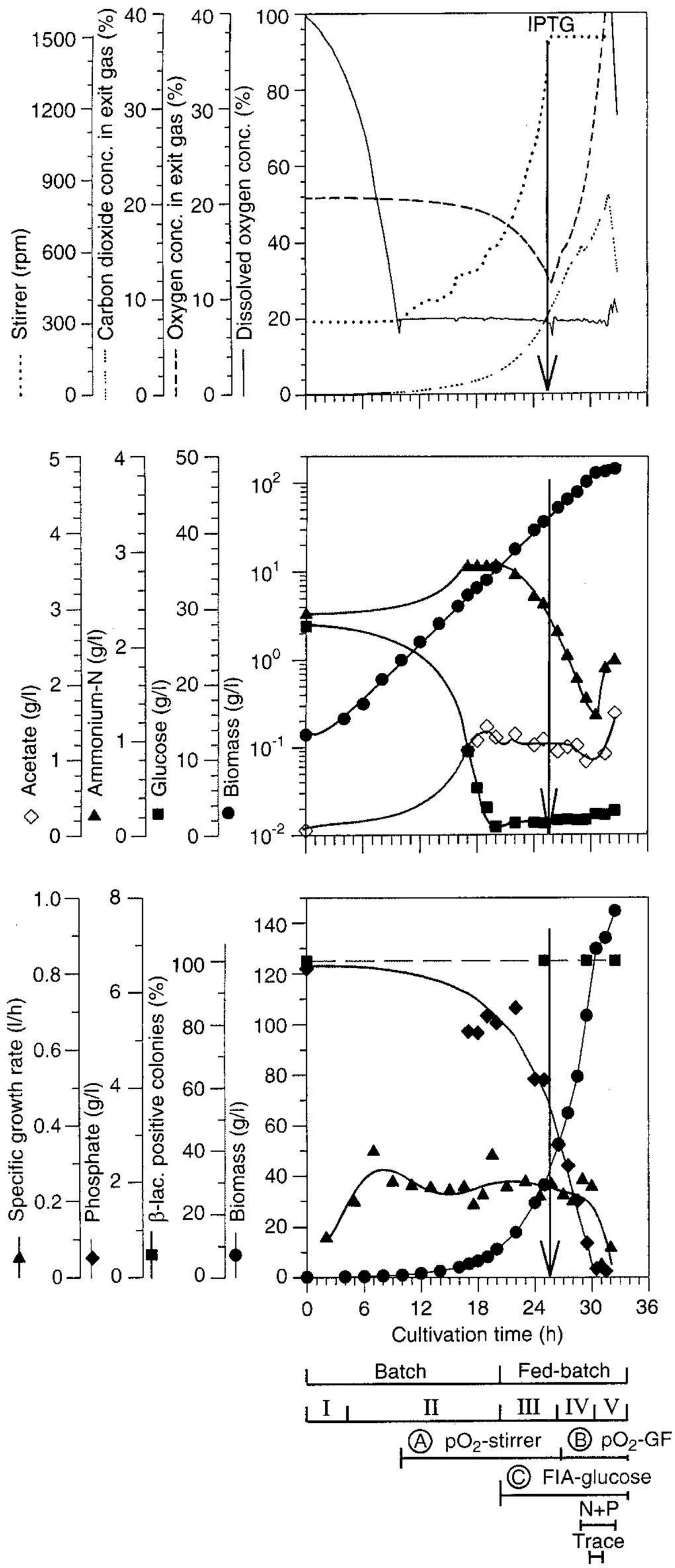

Fig. 3 High-cell-density cultivation of *E. coli* RV308(pHKK). Time courses of biomass, glucose, ammonium N, phosphate, acetate, stirrer speed, PO_2, O_2 and CO_2 in off-gas, plasmid stability (expressed as a percentage of ß-lactamase-positive colonies) as well as specific growth rate are shown. The batch and fed-batch phase with their characteristic sub-phases I to V are indicated. The isopropyl β-D-thigalactoside (*IPTG*) arrow marks the beginning of the miniantibody production phase. The durations of the on-line controls: *A* PO_2-stirrer, B PO_2-gas flow ratio and *C* flow injection analyzer-glucose as well as of the dosage of feeding solution 2 (*N* + *P*) and feeding solution 3 (*trace*) are also included

PO_2-stirrer speed control maintained the PO_2 at 20%. The initial glucose decreased to a level of 1.5 g l^{-1}, which is the point that defines the end of sub-phase II. From now (start of sub-phase III), the concentration of glucose was maintained by the on-line controlled flow injection analysis system during the whole fed-batch phase (Fig. 2). Since 1.5 g l^{-1} glucose is far above the K_s value for glucose (Bergter 1983), the cells could grow further at μ_{max}. IPTG was added at 40 g dry biomass l^{-1} to induce miniantibody formation (beginning in sub-phase IV). After the maximum stirrer speed had been reached, the PO_2 gas flow ratio controller was initialized. Air was enriched with pure oxygen to keep PO_2 at 20%. Because of growth, the levels of ammonium nitrogen and phosphate decreased continuously to different extents for unknown reasons. To avoid limitations of N and P, the feeding solution 2 (FS2, Table 1) was fed into the culture at a constant rate (for time interval see Fig. 3). Since phosphate decreased faster than nitrogen, the dosage rate of FS2 was enhanced. Further imbalances resulted, however, as shown by the kinetics of phosphate and nitrogen (Fig. 3). In addition, 50 ml FS3 was continuously fed at a constant rate for 1 h to circumvent shortage of trace elements. The growth ceased in sub-phase V, leading to a reduction in the CO_2 evolution rate. Apart from possibly being caused by metabolic inbalances, this growth reduction is probably due to accumulation of miniantibodies in the cells.

Figure 4 shows the product formation kinetics during HCDC of *E. coli* RV308(pHKK) with a maximal volumetric yield of 3.3 g/l functional miniantibodies and 4.1 g l^{-1} total (functional and non-functional) miniantibodies. These yields correspond to about 4.2% of the total cellular protein (functional miniantibodies) and about 5% (total miniantibodies) respectively. They were achieved 5 h after IPTG addition and remained at this level for a further 2 h until the end of the fermentation. The maximal specific yields (mg minianti-

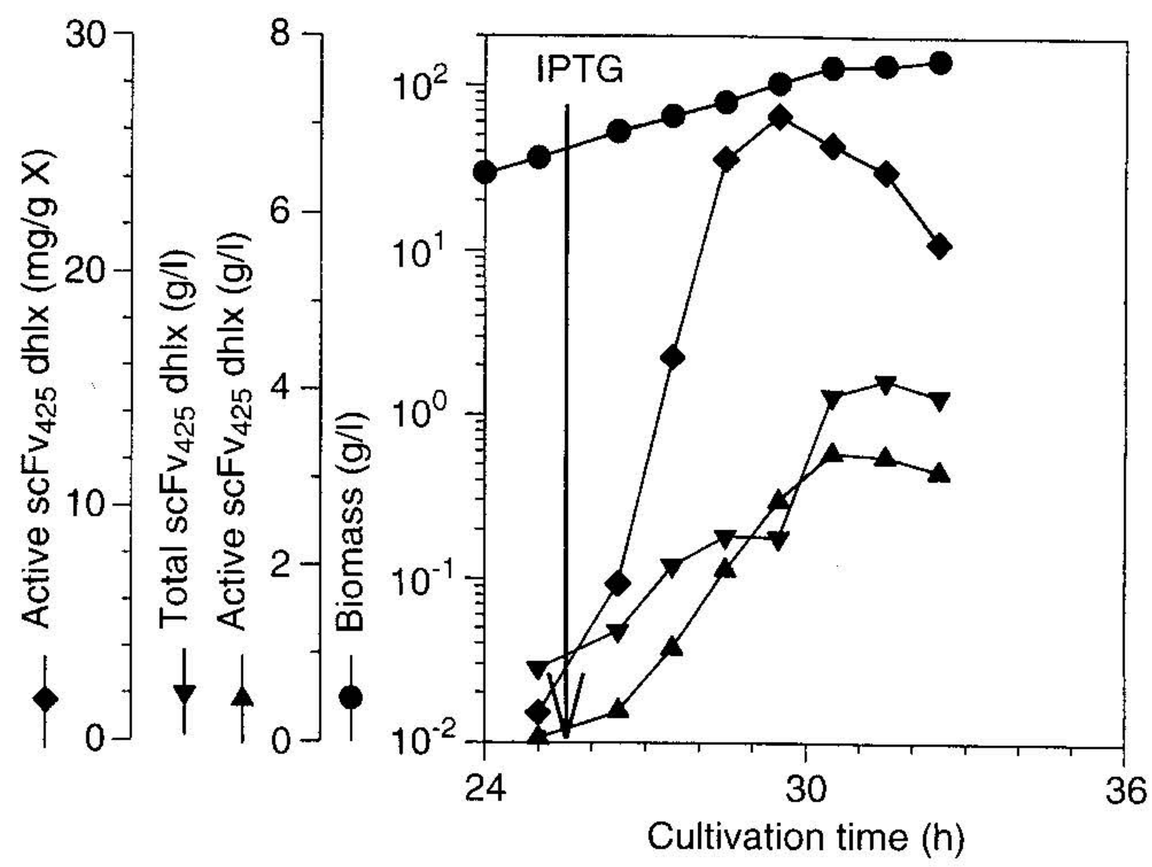

Fig. 4 Miniantibody formation in the production phase after addition of IPTG. The kinetics of functional miniantibody ($scFv_{425}$dhlx) and of total (functional and non-functional) miniantibody fragment production are shown

bodies · dry biomass^{-1}) were approximately 25 mg g^{-1} for functional and about 30 mg g^{-1} for total miniantibodies. We obtained very similar amounts of miniantibodies per dry biomass in low-cell-density cultures in shake flasks, i.e. 30–40 mg g^{-1} (data not shown). The basal level of miniantibodies prior to addition of IPTG was approximately 5%–7% of the maximal product yield.

Discussion

pHKK – an optimized expression vector for HCDC

In previous experiments, involving production of phosphorylcholine-binding miniantibodies, we observed considerable plasmid loss during some HCDC runs of *E. coli* RV308(pACK02sc-kan) (Pack et al. 1993). While pACK02sc-kan contained genes for resistance to ampicillin and kanamycin, even both antibiotics combined did not provide the intended selection pressure in HCDC. The β-lactamase introduced with the inoculant (probably from a small fraction of lysed cells) inactivated ampicillin in the culture medium within the first hour of inoculation, while the high initial salt concentration rendered the kanamycin ineffective (M. Roth, unpublished data). To circumvent these problems, our new vector pHKK (Fig. 1) contains the *hok/sok* suicide system, which mediates plasmid maintenance by killing plasmid-free segregants (Gerdes 1988; Thisted et al. 1994). pHKK proved to be very stable in *E. coli* RV308 (see Fig. 3). All cells retained pHKK during their cultivation to high cell densities (until about 400 A_{550}, which corresponds to 145 g dry biomass l^{-1}).

The terminator t_{HP} (Nohno et al. 1988) was introduced in pHKK between *lacI* and the recombinant expression cassette to prevent read-through from upstream genes. This strategy has also led to significantly reduced read-through in related phage-display vectors (A. Krebber et al. submitted). Nevertheless, the basal recombinant expression during growth prior to induction with IPTG (Fig. 4) could still not be eliminated completely by using the upstream terminator. Therefore, we believe that the residual basal expression must be due to incomplete repression of *lac plo*. This could be related to incomplete glucose repression at 0.15% glucose in the growth medium. Furthermore, by introducing the much stronger T7g10 ribosome-binding site upstream of *pelB*, the translation efficiency of the remaining mRNA molecules is enhanced, which may also contribute to the basal recombinant expression. Fortunately, the EGF-receptor-specific bivalent miniantibodies were not toxic for the host cells (see below). Indeed, after addition of IPTG the strong expression system led to high cellular levels of dimeric, functional miniantibodies, secreted into the periplasm (approx. 4% of total cellular protein are functional miniantibodies at low as well at high cell densities).

Growth and miniantibody formation in HCDC without substrate limitation

Surprisingly, and somewhat fortunately, *E. coli* RV308(pHKK) did not accumulate high amounts of acetate during growth to high cell densities for reasons yet unknown (Fig. 3). Acetate accumulation under unrestricted aerobic growth conditions (specific growth rate $\mu = \mu_{max}$) is a common phenomenon for other *E. coli* strains. It is assumed that aerobic consumption of glucose is limited by electron transport in the respiratory chain and the tricarboxylic acid cycle, forcing glycolysis into side pathways (Varma and Palsson 1994). Therefore, fed-batch cultivations with limited supply of substrate ($\mu < \mu_{max}$) and hence reduced acetate accumulation have become the state-of-the-art for HCDC of *E. coli* (Riesenberg et al. 1991, 1994; Kleman and Strohl 1994; Gerhard and Drews 1994; Korz et al. 1995). Growth at reduced μ as well as product formation under substrate limitation are shortcomings for high-productivity processes, however, because they lead to long fermentation times and decreased product formation. We could circumvent both disadvantages by using the low-acetate-accumulator strain RV308 and by maintaining physiological substrate levels for unrestricted growth. Both are important prerequisites for high-productivity processes.

In recent years, *E. coli* mutants or engineered strains with reduced acetate accumulation have been generated (Bauer et al. 1990; Chou et al. 1994; Aristidou et al. 1994). Unfortunately, a phosphotransacetylase mutant of *E. coli* K12 with reduced acetate accumulation grew much more slowly than its wild-type counterpart (Bauer et al. 1990). *E. coli* TOPP5 seems to be a low-acetate-accumulator strain (Phelps et al. 1995), but it is not a derivative of *E. coli* K12, it produces hemolysin and is thought to be pathogenic (Steinrück 1993, personal commun.). The *Bacillus subtilis* acetolactate synthase gene (*als*) has also been expressed on a plasmid in *E. coli* and found to modify drastically the cellular glycolytic fluxes to direct pyruvate to the less harmful metabolic by-product acetoin rather than to acetate (Aristidou et al. 1994). However, *E. coli* RV308 is advantageous because it accumulates low amounts of acetate without concomitant accumulation of significant levels of acetoin, which lead to reduced growth yields.

The maintainance of an almost constant physiological level of glucose at high cell densities is not a trivial task given the very high glucose consumption rates and the resultant requirement for a rapidly responding controller that can regulate the high feeding rates. Our glucose flow injection analysis controlling system (Fig. 2, Pfaff et al. 1995) could fulfill this requirement since only 53 seconds were needed for sampling, sample dilution and sample transport to the glucose enzyme electrode. The small deviations from the set point of the glucose level (1.5 ± 0.25 g l^{-1}) had no effect on the growth rate (Fig. 3). These deviations should, in any case, be further diminishable by applying predictive and

feedback control algorithms according to Kleman et al. (1991). Alternative approaches for on-line control of glucose have been described recently, including closed-loop control of fed-batch cultures using on-line HPLC (Turner et al. 1994), which includes a time-consuming microcentrifugation step for separation of supernatant and cells. An autoclavable glucose biosensor (Phelps et al. 1995) has also been used, but changes in PO_2 and pH in the culture medium influence the glucose biosensor, distorting the signal for glucose concentration. Even short interruptions in the regulation of PO_2 and pH or metabolically caused deviations from their set points may lead to uncontrolled oscillations of the glucose level in the culture.

It was the main characteristic of our HCDC with recombinant *E. coli* RV308 that the miniantibodies could be synthesized without limitation or inhibition of substrates or the presence of inhibitory metabolites. Only the accumulated miniantibodies themselves finally led to growth inhibition (Figs. 3, 4). After induction of miniantibody formation by the addition of 1 mM IPTG, growth continued almost unchanged for 1.5 doublings of biomass with concomitant miniantibody accumulation. Neither periplasmic leakiness nor lysis of cells occurred in HCDC (data not shown). We obtained miniantibodies at several grams per liter. In *E. coli* RV308, the final volumetric yield of miniantibodies was more than 4 g l^{-1}, of which 80% was functionally assembled. These miniantibodies were not toxic for the host cells and the antibody construct gave rise to very little aggregation and a rather high yield of protein folding. While experiments to improve other antibody sequences to the same degree of folding are underway (Knappik and Plückthun 1995; H. Bothmann, G. Wall, L. Nieba, S. Jung, and A. Plückthun unpublished), these data show the great potential of the *E. coli* technology once these obstacles have been overcome. Taking all data together, we believe that the improved vector and the high-cell-density fermentation we have now established, which is devoid of substrate limitations, will be useful for the production not only of other antibody fragments but also of many other recombinant proteins in high volumetric yields.

Acknowledgements The excellent technical assistance of Sylke Fricke, Silke Steinbach and Gisela Sudermann (HKI/Jena) and of Eva Leibrock and Dirk Müller-Pompalla (Merck KGaA/Darmstadt) is gratefully acknowledged. We thank Mary M. Bendig and Catherine A. Kettleborough (MRC Collaborative Centre, London) for providing us with the initial scFv constructs and we thank Uwe Hofmann for his advice in designing the single-chain constructs. The plasmid pKG1022 was kindly supplied by O. W. Christensen (Nycomed Pharma, Hvidovre, Denmark). The support of the project (FKZ 03106008A/B) by BMBF (Bonn, Germany) and Merck KGaA (Darmstadt, Germany) is also gratefully acknowledged.

References

Aristidou AA, San KY, Bennett GN (1994) Modification of central metabolic pathway in *Escherichia coli* to reduce acetate accumulation by heterologous expression of the *Bacillus subtilis* acetolactate synthase gene. Biotechnol Bioeng 44: 944–951

Bauer KA, Ben-bassat A, Dawson M, De La Puente VT, Neway JO (1990) Improved expression of human interleukin-2 in high-cell-density fermentor cultures of *Escherichia coli* K-12 by a phosphotransacetylase mutant. Appl Environ Microbiol 56: 1296–1302

Bergter F (1983) Wachstum von Mikroorganismen. Fischer, Jena, p 41

Better M, Chang CP, Robinson RR, Horwitz AH (1988) *Escherichia coli* secretion of an active chimeric antibody fragment. Science 240: 1041–3

Better M, Bernhard SL, Lei SP, Fishwild DM, Lane JA, Carroll SF, Horwitz AH (1993) Potent anti-CD5 ricin A chain immunoconjugates from bacterially produced Fab′ and $F(ab')_2$. Proc Natl Acad Sci USA 90: 457–461

Buchner E, Rudolph R (1991) Renaturation, purification and characterization of recombinant Fab-fragments produced in *Escherichia coli*. Biotechnology 9: 157–162

Carter P, Kelley RF, Rodrigues ML, Snedecor B, Covarrubias M, Velligan MD, Wong WLT, Rowland AM, Kotts CE, Carver, ME, Yang M, Bourell JH, Shepard M, Henner D (1992) High level *Escherichia coli* expression and production of a bivalent humanized antibody fragment. Biotechnology 10: 163–167

Chou CH, Bennett GN, San KY (1994) Effect of modified glucose uptake using genetic engineering techniques on high-level recombinant protein production in *Escherichia coli* dense cultures. Biotechnol Bioeng 44: 952–960

Clackson T, Hoogenboom HR, Griffiths AD, Winter G (1991) Making antibody fragments using phage display libraries. Nature 352: 624–628

Condra JH, Sardana VV, Tomassini JE, Schlabach AJ, Davies ME, Lineberger DW, Graham DJ, Gotlib L, Colonno RJ (1990) Bacterial expression of antibody fragments that block human rhinovirus infection of cultured cells. J Biol Chem 265: 2292–2295

Derman AI, Prinz WA, Belin D, Beckwith J (1993) Mutations that allow disulfide bond formation in the cytoplasm of *Escherichia coli*. Science 262: 1744–1747

Fanger MW (1995) Bispecific antibodies. Springer, New York Berlin Heidelberg

Freund C, Ross A, Guth B, Plückthun A, Holak T (1993) Characterization of the linker peptide of the single-chain Fv fragment of an antibody by NMR spectroscopy. FEBS Lett 320: 97–100

Gerdes K (1988) The parB (*hok/sok*) locus of plasmid R1: a general purpose plasmid stabilization system. Biotechnology 6: 1402–1405

Gerhard P, Drew SW (1994) Liquid culture. In: Gerhard P, Murray RGE, Wood WA, Krieg NR (eds) Methods for general and molecular biology. ASM, Washington, DC, pp 224–247

Glockshuber R, Schmidt T, Plückthun A (1992) The disulfide bonds in antibody variable domains: effects on stability, folding in vitro, and functional expression in *Escherichia coli*. Biochemistry 31: 1270–9

Haber E (1992) Engineered antibodies as pharmacological tools. Immunol Rev 130: 189–212

Hoogenboom HR, Griffiths AD, Johnson KS, Chiswell DJ, Hudson P, Winter G (1991) Multi-subunit proteins on the surface of filamentous phage: methodologies for displaying antibody (Fab) heavy and light chains. Nucleic Acids Res 19: 4133–4137

Huston JS, Mudgett-Hunter M, Tai MS, McCartney J, Warren F, Haber E, Oppermann H (1991) Protein engineering of single-chain Fv analogs and fusion proteins. Methods Enzymol 203: 46–88

Huston JS, Tai MS, McCartney J, Keck P, Oppermann H (1993a) Antigen recognition and targeted delivery by the single-chain Fv. Cell Biophys 22: 189–224

Huston JS, McCartney J, Tai MS, Mottola-Hartshorn C, Jin D, Warren F, Keck P, Oppermann H (1993b) Medical applications of single-chain antibodies. Int Rev Immunol 10: 195–217

Kettleborough CA, Saldanha J, Heath VJ, Morrison CJ, Bendig MM (1991) Humanization of a mouse monoclonal antibody by

CDR-grafting: the importance of framework residues on loop conformation. Protein Eng 4: 773–778

Kettleborough CA, Ansell KH, Allen RW, Rosell-Vives E, Gussow DH, Bendig MM (1994)Isolation of tumor cell-specific single-chain Fv from immunized mice using phage-antibody libraries and the re-construction of whole antibodies from these antibody fragments. Eur J Immunol 24: 952–958

Kleman GL, Strohl WR (1994) Developments in high cell density and high productivity microbial fermentation. Curr Opinion Biotechnol 5: 180–186

Kleman GL, Chalmers JJ, Luli GW, Strohl WR (1991) A predictive and feedback control algorithm maintains a constant glucose concentration in fed-batch fermentations. Appl Environ Microbiol 57: 910–917

Knappik A, Plückthun A (1995) Engineered turns of a recombinant antibody improve its in vivo folding. Protein Eng 8: 81–89

Korz DJ, Rinas U, Hellmuth K, Sanders EA, Deckwer WD (1995) Simple fed-batch technique for high cell density cultivation of *Escherichia coli*. J Biotechnol 39: 59–65

Kuzel TM, Rosen ST (1994) Antibodies in the treatment of human cancer. Curr Opinion Oncol 6: 622–626

Laemmli UK (1970) Cleavage of structural proteins during the assembly of the head of bacteriophage T4. Nature 227: 680–685

Maurer R, Meyer BJ, Ptashne M (1980) Gene regulation at the right operator (O_R) of bacteriophage λ-O_R3 and autogenous negative control by repressor. J Mol Biol 139: 147–161

Mertens N, Remaut E, Fiers W (1995) Tight transcriptional control mechanism ensures stable high-level expression from T7 promoter-based expression plasmids. Biotechnology 13: 175–179

Nohno T, Kasai Y, Saito T (1988) Cloning and sequencing of the *Escherichia coli* chlEN operon involved in molybdoterin biosynthesis. J Bacteriol 170: 4097–4102

Pack P, Plückthun A (1992) Miniantibodies: use of amphipatic helices to produce functional, flexibly linked dimeric Fv fragments with high avidity in *Escherichia coli*. Biochemistry 31: 1579–1584

Pack P, Kujau M, Schroeckh V, Knüpfer U, Wenderoth R, Riesenberg D, Plückthun A (1993) Improved bivalent miniantibodies, with identical avidity as whole antibodies, produced by high cell density fermentation of *Escherichia coli*. Biotechnol 11: 1271–1277

Pack P, Müller K, Zahn R, Plückthun A (1995) Tetravalent miniantibodies with high avidity assembling in *Escherichia coli*. J Mol Biol 246: 28–34

Pan JG, Rhee JS, Lebeault JM (1987) Physiological constraints in increasing biomass concentration of *Escherichia coli* in fed-batch culture. Biotechnol Lett 2: 89–94

Pfaff M, Wagner E, Wenderoth R, Knüpfer U, Guthke R., Riesenberg D (1995) Model-aided on-line glucose monitoring for computer-controlled high cell density fermentations. In: Munack A, Schügerl K (eds) Computer applications in biotechnology. Elsevier Science, Oxford, pp 6–11

Phelps MR, Hobbs JB, Kilburn DG, Turner RFB (1995) An autoclavable glucose biosensor for microbial fermentation monitoring and control. Biotechnol Bioeng 46: 514–524

Plückthun A (1992) Mono- and bivalent antibody fragments produced in *Escherichia coli*: engineering, folding and antigen binding. Immunol Rev 130: 151–188

Plückthun A (1994) *Escherichia coli* producing recombinant antibodies. In: Murooka Y, Imanaka (eds) Recombinant microbes for industrial and agricultural applications. Dekker, New York Basel Hong Kong, pp 233–252

Proba K, Ge L, Plückthun A (1995) Functional antibody single-chain fragments from the cytoplasm of *Escherichia coli*: influence of thioredoxin reductase (TrxB). Gene 159: 203–7

Renner C, Pfreundschuh M (1995) Tumor therapy by immune recruitment with bispecific antibodies. Immunol Rev 145: 179–209

Riesenberg D (1991) High-cell-density cultivation of *Escherichia coli*. Curr Opinion Biotechnol 2: 380–384

Riesenberg D, Schulz V, Knorre WA, Pohl H-D, Korz D, Sanders E A, Roß A, Deckwer W-D (1991) High cell density cultivation of *Escherichia coli* at controlled specific growth rate. J Biotechnol 20: 17–18

Riesenberg D, Pohl HD, Schroeckh V, Knorre WA (1994) Recombinant protein fermentation during high cell density cultivation (HCDC) of *Escherichia coli*. In: Alberghina L, Frontali L, Sensi P (eds) ECB6. Proceedings of the 6th European Congress on Biotechnology. Elsevier, Amsterdam London New York, pp 817–821

Rinas U, Kracke-Helm HA, Schügerl K (1989) Glucose as a substrate in recombinant strain fermentation technology. Appl Microbiol Biotechnol 32: 163–167

Rodeck U, Herlyn D, Molthoff C, Atkinson B, Varello M, Steplewski Z, Koprowski H (1987) Tumor growth modulation by a monoclonal antibody to the epidermal growth factor receptor: immunologically mediated and effector cell-independent effects. Cancer Res 47: 3692–3696

Sambrook J, Fritsch EF, Maniatis T (1989). Molecular cloning. A laboratory manual, 2nd edn. Cold Spring Harbor Laboratory, Cold Spring Harbor, NY

Shibui T, Munakata K, Matsumoto R, Ohta K, Matsushima R, Morimoto Y, Nagahari K (1993) High-level production and secretion of a mouse-human chimeric Fab fragment with specificity to human carcino embryonic antigen in *Escherichia coli*. Appl Microbiol Biotechnol 38: 770–775

Skerra A, Plückthun A (1988) Assembly of a functional immunoglobulin Fv fragment in *Escherichia coli*. Science 240: 1038–1041

Skerra A, Pfitzinger I, Plückthun A (1991) The functional expression of antibody Fv fragments in *Escherichia coli*: improved vectors and a generally applicable purification technique. Biotechnology 9: 273–278

Smith PK, Krohn RI, Hermanson GT, Mallia AK, Gartner FH, Provenzano MD, Fujimoto EK, Goeke NM, Olson BJ, Klenk DC (1985) Measurement of protein using bicinchoninic acid. Anal Biochem 150: 76–85

Thisted T, Nielson AK, Gerdes K (1994) Mechanism of post-segregational killing: translation of Hok, SrnB and Pnd mRNAs of plasmids R1, F and R483 is activated by 3′ -end processing. EMBO J 13: 1950–1959

Turner C, Gregory ME, Thornhill NF (1994) Closed-loop control of fed-batch cultures of recombinant *Escherichia coli* using on-line HPLC. Biotechnol Bioeng 44: 819–829

Varma A, Palsson BO (1994) Metabolic flux balancing: basic concepts, scientific and practical use. Biotechnology 12: 994–998

Webb J, Dean JF, Marshall RD (1990) Automatic aseptic sampling of fermentation broth. Biotechnology 8: 926–928

Whitlow M, Filpula D (1991) Single-chain Fv proteins and their fusion proteins. Methods. A companion to Methods Enzymol 2: 97–105