FEBS 16419 FEBS Letters 377 (1995) 227–231

Co-selection of cognate antibody–antigen pairs by selectively-infective phages

Claus Krebber**, Stefania Spada**, Dominique Desplancq***, Andreas Plückthun*

Biochemisches Institut, Universität Zürich, Winterthurerstr. 190, CH-8057 Zürich, Switzerland

Received 9 November 1995

Abstract We have developed a chloramphenicol resistant derivative of fd phage with which cognate pairs of antibodies and antigens can be selected. The phage genome encodes a fusion of single-chain antibody to the C-terminal domain of gIIIp, rendering the phage non-infective. The antigen fused to the N-terminal domains of gIIIp is encoded in the same phage genome. Antigen and antibody fusion interact with each other in the periplasm of the phage-producing cell, restoring infectivity. This system has a very low background and will allow simultaneous randomisation of antibody and antigen.

Key words: Selectively-infective phage; Phage display; Antibody engineering; Filamentous phage; Single-chain Fv fragment

1. Introduction

Phage display technology has been successfully used to select individual peptide or protein sequences that bind a given target from libraries of filamentous phages [1,2]. Applications of this technology have included determination of the peptide epitope of an antibody [3] and selection for antibody fragments that bind to peptidic antigens [4]. We have now devised a selectively-infective phage (SIP) in which cognate pairs of peptidic antigen and antibody can be selected at the same time.

In traditional phage panning, libraries of the peptide or protein of interest are fused to an intact gene III phage protein (gIIIp) [5] or to its C-terminal domain requiring the use of helper phages to supply wt gIIIp [6]. The resulting display-phages are adsorbed to the binding partner and thus, either directly or indirectly, to a solid support. The major technical challenge is to separate phages bound by the cognate interaction from the great majority that are bound by nonspecific interactions. This is usually achieved by means of multiple rounds of binding and subsequent reinfection. The nature of these experiments allows the randomisation of only one of the reaction partners.

In our system, the antibody-displaying phage is itself non-infectious and acquires the ability to infect cells only upon the occurrence of a cognate interaction between antibody and antigen in the periplasm, directly liberating infectious phage from the host (Fig. 1). This selective infectivity is achieved by exploiting the modular structure of gIIIp, a protein of three domains of 68, 131 and 150 amino acids separated by glycine-rich linkers of 18 and 39 amino acids, respectively (Fig. 2) [7]. The first two domains (N1-N2) have been shown to be responsible for the docking of the phage to the F-pili of male *E. coli* and subsequent penetration of the bacterial membrane [8,9,10], while the C-terminal domain (CT) is presumed to have a structural role, making contact with the DNA and forming the tip of the phage particle [11].

It has previously been reported that phagemids can be used to display one of the interaction partners on the phage by fusing it to the N-terminus of the third domain of gIIIp (CT). Infection can then be restored by the addition of the first domain (N1) in vitro [12], or of the first two domains (N1-N2) in vivo [13], fused to the cognate partner. To package such phagemids a second genetic entity, a helper phage, that provides the genes for all phage functions except the wt gIIIp (ΔgIIIHP), is needed [14,15].

In order to overcome the problems intrinsic to these ΔgIIIHP (see below), we have engineered a single genetic package, a phage, which encodes both an antibody-CT fusion (scFv-CT) and a N1-N2–antigen fusion (N1-N2–Ag). This allows the formation of antibody–antigen complexes in the phage-producing cell, in the absence of any external factor, thus restoring phage infectivity. We have now developed a very stable phage vector system which does not undergo noticeable genetic rearrangement. We have therefore devised an extremely simple system, relying on the transmission of antibiotic resistance by phage infection of bacteria, for delineating pairs of interacting molecules in vivo.

2. Materials and methods

2.1. Bacteria, phages, plasmids

XL1-Blue (Stratagene) (*recA1 endA1 gyrA96 thi-1 hsdR17 supE44 relA1 lac [F′ proAB lacI^{q}ZΔM15* Tn*10* (Tet^r)]^c) was used as donor. XL1-Blue MRF′ Kan (Stratagene) (*Δ(mcrA)183 Δ(mcrCB-hsdSMR-mrr)173 endA1 supE44 thi-1 recA1 gyrA96 relA1 lac [F′ proAB lacI^{q}ZΔM15* Tn*5* (Kan^r)]^c) was used as recipient. fd phage was obtained from American Type Culture Collection (ATCC: 15669-B2). Resistance genes were PCR-amplified from pACYC174 (cam^R), pACYC188 (kan^R) and pUC19 (amp^R).

2.2. scFv gene synthesis

The single-chain Fv fragment (scFv) in the orientation V_L-linker-V_H

*Corresponding author. Fax: (41) (1) 257-5712.
E-mail: plueckthun@biocfebs.unizh.ch

**Both C.K. and S.S. contributed equally to this work.

****Present address:* Département Récepteurs et Protéines Membranaires, UPR 9050 du CNRS, ESBS, Pôle Universitaire d'Illkirch, Rue Sébastien Brandt, F-67400 Illkirch, France.

Abbreviations: aa, amino acid; amp, ampicillin; cam, chloramphenicol; cfu, colony forming units; ELISA, enzyme linked immunosorbent assay; HAG, hemagglutinin; hag, peptide from hemagglutinin bound by antibody 17/9; kan, kanamycin; OD_{550}, optical density at 550 nm; PBS, phosphate-buffered saline; PCR, polymerase chain reaction; pfu, plaque forming units; scFv single-chain Fv fragment; SIP, selectively-infective phage; tet, tetracycline; V_H, variable domain of the heavy chain; V_L, variable domain of the light chain; wt, wild type.

SSDI 0014-5793(95)01348-2

of the antibody 17/9 [16] was obtained by gene synthesis [17]. The V_L domain carries a three amino acid long FLAG [18]. To eliminate any oligomerisation tendency of the scFv, we have used a 30 amino acid linker between the V_H and V_L domains [19].

2.3. ELISA

The hag-peptide KNSYPYDVPDYASLRS was synthesised on an ABI 430A Peptide Synthesizer (Applied Biosystems Inc.) using the FastMoc strategy [20]. The peptide was subsequently coupled to denatured and reduced transferrin by the heterobifunctional linker 3-maleimidobenzoyl-*N*-hydroxy-succinimide (Fluka) [21]. This was coated at 20 μg per well onto a Maxisorp ELISA plate (Nunc) at 4°C overnight. After 1 h blocking with 5% skim milk in PBS phage dilutions in PBS were incubated in the wells for 2 h at 26°C. The bound phages were detected with 1:5000 sheep anti-M13 IgG conjugated to horseradish peroxidase (Pharmacia) with soluble substrate (Boehringer).

2.4. Phage construction

Cloning was carried out according to standard methods [22]. PCR was done with Vent-Polymerase (New England Biolabs) according to the manufacturer.

2.5. Selective infection experiments

An overnight culture of XL1-Blue, containing phage DNA, was used to inoculate 2 × YT medium, supplemented with 1% glucose and antibiotics (34 μg/ml cam, 5 μg/ml tet). Cells were grown at 37°C until an $OD_{550} = 0.5$ was reached. After centrifugation the pellet was resuspended in 2 × YT medium containing the appropriate antibiotics and 0.5 mM IPTG, to induce the expression of the two fusion proteins under the control of the *lac* promotors ($lac^{p/o}$), allowing packaging of the phages. After overnight growth at 26°C, phage particles were harvested from the culture supernatant by precipitation with polyethylene glycol and quantified by spectrophotometry [23]. To quantify infectivity, phages were incubated with 1 ml of XL1-Blue MRF' Kan ($OD_{550} = 0.5$) for 1 h at 37°C with gentle agitation. Bacteria were plated on 2 × YT-agar containing 50 μg/ml kan, 34 μg/ml cam, 1% glucose. Phage clones were analysed either by restriction analysis of miniprep DNA or growth of the colonies in microtiter wells followed by ELISA testing of the phage-containing supernatants for antigen binding.

3. Results and discussion

Phage particles can in principle be produced by a phagemid/helper phage system. In order to obtain a phage which is infective only when a cognate interaction between antigen and antibody takes place (SIP), the helper phage is not allowed to deliver any wt gIII to the phage particles (ΔgIII HP). This ΔgIII HP must be able to infect a phagemid library, however, for which it needs gIII protein. This special helper phage must therefore be produced in a cell which harbours an unpackagable gIIIp expression plasmid [12,15]. In attempting to devise such a system, we found that all gIIIp-expression plasmids tested, derived from pUC, pACYC or pBR vectors, were packaged with low efficiencies due to the presence of unidentified cryptic packaging signals (data not shown). This led to the production of wt gIIIp in the pool of display phages, rendering

Table 1
Influence of different resistances on phage titer

Phage	Resistance	Titer (pfu/ml)	
		After 12 h growth	After 20 h growth
fCKC	cam^R	5×10^9	6×10^{10}
fCKK	kan^R	4×10^7	6×10^9
fCKA	amp^R	4×10^{10}	3×10^{10}
fd	none	10^{12}	10^{12}

Phages are derived from fd, with the antibiotic resistance genes inserted at the same point as shown in Fig. 3b for fCKC, but with the cam^R replaced by kan^R or amp^R including their promoters.

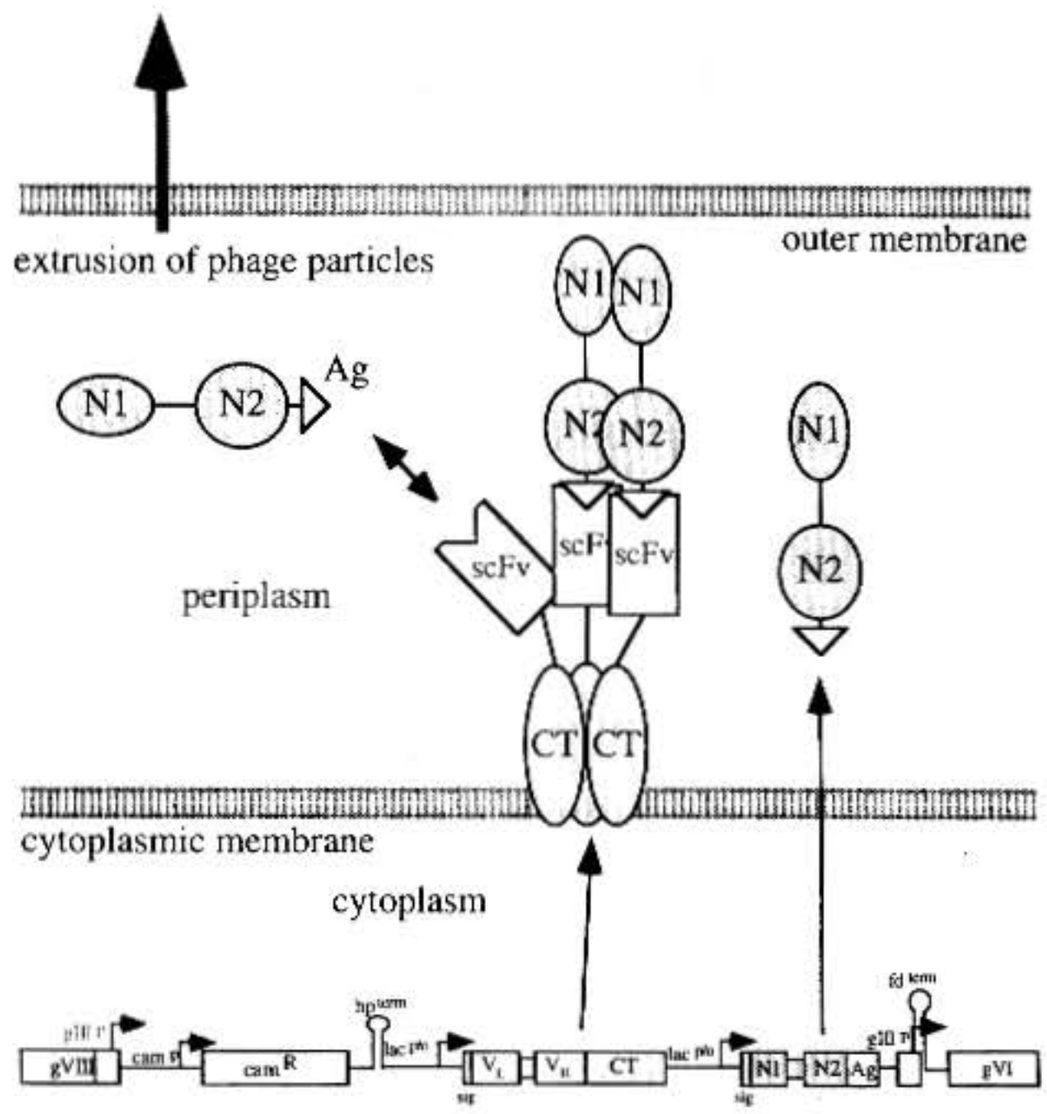

Fig. 1. The association of N1-N2–Ag, secreted to the periplasm, and scFv-CT, inserted in the inner membrane, occurs in the periplasm during phage assembly before extrusion.

these infectious and thus losing the 'non-infectivity' which is the prerequisite for the selectivity of the infection process. This may also explain the background previously observed by other workers [12,15]. Alternatively, the phagemid library can be transformed into ΔgIII HP-containing cells [13]. Use of fCA55 and fKN16 [14] gives rise, however to the assembly of 'stump' CT [14], competing with the display of antibody fusion on the phage. This will lead to varying, but always low, antibody display rates that are dependent on the differing folding efficiencies of scFvs [24]. Furthermore, in our experience ΔgIII M13KO7, from which gIII is precisely deleted, showed high genetic instability and lowered the viability of bacteria (data not shown), making it difficult to use in the preparation of ΔgIII M13KO7-containing competent cells to take up the phagemid library.

In order to avoid these problems we attempted to simplify the system as much as possible by using a single genetic package, incorporating the genes for both interaction partners in the same phage vector. The circular genome of the filamentous phages M13, f1 and fd [25] consists of two transcription units, of 6 and 4 genes. The units are separated by a central terminator on one side and the origin of replication on the other (Fig. 3), and within the units there is no space between the open reading frames.

We inserted an antibiotic resistance gene into the fd genome to facilitate detection of infection events because plaque formation will occur only at near wt levels of replication and infectivity. Since initial experiments using fd-tet phage [26], which carries a tetracycline resistance gene in one of the hairpins of the phage origin of replication, yielded rather low phage titers, we decided to insert the resistance gene immediately downstream from the central terminator (Fig. 3b). In the wt phage, the −35 box of the weak gIII promoter is within the end of gVIII and the −10 box is within the strong central terminator

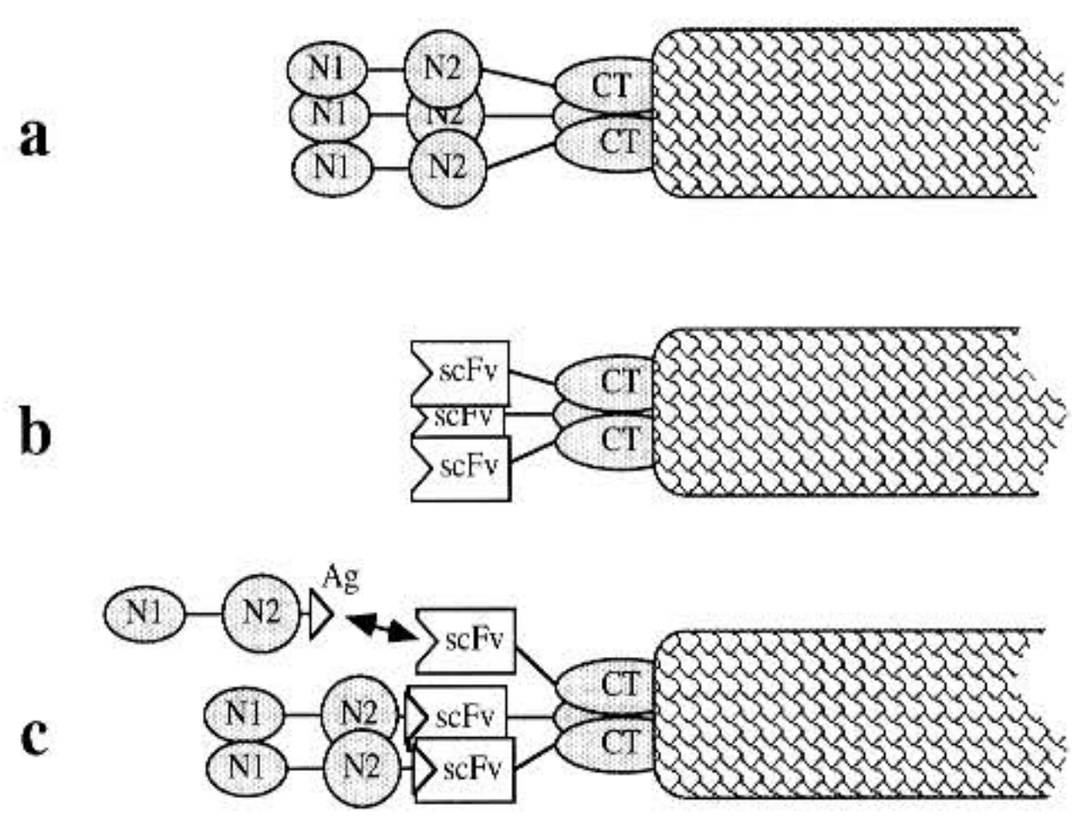

Fig. 2. (a) wt fd phage is infective. (b) Multivalent antibody-displaying phage, devoid of N1-N2, is non-infective. (c) Infectivity is restored by the cognate interaction between antibody and antigen, reconstituting the gIIIp functions.

(fd^{term}). Therefore, we duplicated the −35 promoter box in gVIII and inserted resistance cassettes between the duplicated areas (Fig. 3b). We tested several antibiotic resistances at this position and found that the phages remained highly infectious but showed different titers (Table 1) and plaque morphologies with different resistances. To optimise the expression level of the resistance gene, we randomised its −35 box promoter sequence. Any sequence isolated from a plaque and then from bacterial colonies was reasoned to lead to a level of expression sufficiently low to be compatible with phage propagation but sufficiently high to provide resistance for selection (data not shown). All further experiments were then carried out with the chloramphenicol acetyl transferase gene (cam^R) thus selected, as it, along with the β-lactamase gene (amp^R) gave the highest level of infectivity. Another advantage of cam^R is that it does not give rise to growth of plasmid-free cells due to enzyme leakage from the cells, as was observed in the case of amp^R.

In addition, the original gIII had to be replaced by the scFv-CT fusion and the N1-N2–antigen fusion in order to make infectivity dependent on the interaction of the two gIII partners (Figs. 1 and 2). In the first version, we opened gIII behind N1-N2 at aa 256 (referring to the mature protein) and inserted the DNA encoding the antigenic peptide in frame. This was followed by a Shine-Dalgarno sequence upstream of the single-chain antibody gene, which was fused to the gIII CT at aa 211 (Fig. 3c). In this orientation, however, homologous recombination occurred at a very high frequency between the duplicated glycine-rich regions, leading to restoration of a wt-like gIII.

Table 2
Dependence of infectivity on the combination of scFv-CT with N1-N2–Ag

Phage			Input phage particles			
fscFv-Ag	scFv-CT	N1-N2-Ag	10^9	10^{10}	10^{11}	10^{12}
f17/9-hag	sc17/9-CT	N1-N2-hag	13	228	~10^3	~10^4
f4D5-hag	sc4D5-CT	N1-N2-hag	0	0	0	5
f17/9 no Ag	sc17/9-CT	N1-N2	0	0	0	0

Number of colonies as a function of input phage particles.

In the next version, therefore, we reversed the orientation of the gIII partners by placing scFv-CT upstream of N1-N2–Ag (Fig. 3d). The two fusions were expressed under the control of separate *lac* promoters ($lac^{p/o}$). Following removal of the original gIII, the expression cassette was inserted directly after the cam^R and the newly-inserted hp terminator (hp^{term}) [27], and before the gIII promoter ($gIII^P$) and fd^{term}. Infectious phages with wt properties were again isolated. In this case wt gIII was restored by intermolecular recombination, leading to duplication of genes between the glycine-rich regions (Fig. 3d).

In the third version of the system, we constructed a phage that does not rearrange at noticeable frequencies by almost completely eliminating the glycine-rich stretches. In the case of the scFv-CT, gIII was cut down to aa 250 and in case of N1-N2–Ag, to aa 219 (Fig. 3e).

As a model system, we have used the well-characterised antibody 17/9 which recognises the peptide epitope DVPDYA (hag) from hemagglutinin [16]. We tested the system by coexpressing the cognate anti-HAG scFv 17/9 or the non-cognate anti-HER2 scFv 4D5 [24,28] with the N1-N2–hag peptide fusion. We chose the antibody 4D5 as a control because we have found it to be extremely well expressed, and thus it should be displayed at a high level. Any non-specific positive effect of scFv-CT on the infectivity of its phage particle will therefore favour the growth of the phage displaying the 4D5 antibody.

Similar numbers of phages (10^9–10^{12}) carrying cognate or non-cognate pairs of fusion proteins were used to infect cells. Of the 10^{11} phage particles displaying anti-HAG scFv together with N1-N2–hag we obtained 10^3 colonies which acquired the resistance, whereas no resistant colonies were observed for the non-cognate anti-HER2 scFv (Table 2). Restriction analysis of twelve colonies gave rise to the expected pattern, indicating that no rearrangement had occurred. We conclude that a very selective infection does indeed occur by the cognate antibody–antigen interaction, mediating the docking of probably several N1-N2–hag proteins to the multivalent antibody-displaying phage. As a further control we deleted the epitope from N1–N2–Ag and, again, no infectivity was observed in 10^{11} phage particles. In a competitive experiment, only phages displaying anti-HAG scFv were isolated from a 1:100 mixture of anti-HAG to anti-HER2-carrying phages that co-expressed N1–N2–hag. Finally, under the conditions described, no background is observed (Table 3).

Ongoing experiments explore the use of this system to randomise the epitope of 17/9 as well as to map permissible changes in the antibody. In this way we will be able to evaluate the limits of on-rate, off-rate and binding constant permissible for in vivo SIP. For non-peptidic antigens, we have also purified the different N-terminal domains of gIIIp and subsequently chemically coupled these to several haptens. This will allow a more quantitative description of the infective process

Table 3
Competition between a cognate and a non-cognate pair of gIII fusions

	f17/9-hag:f4D5-hag	f17/9-hag/total colonies
mixture 1	1:10	60/60
mixture 2	1:100	15/15

Phages (Table 2) were mixed in different ratios before infection. All colonies obtained after infection were tested for the displayed scFv-CT fusion by their binding properties in functional ELISA.

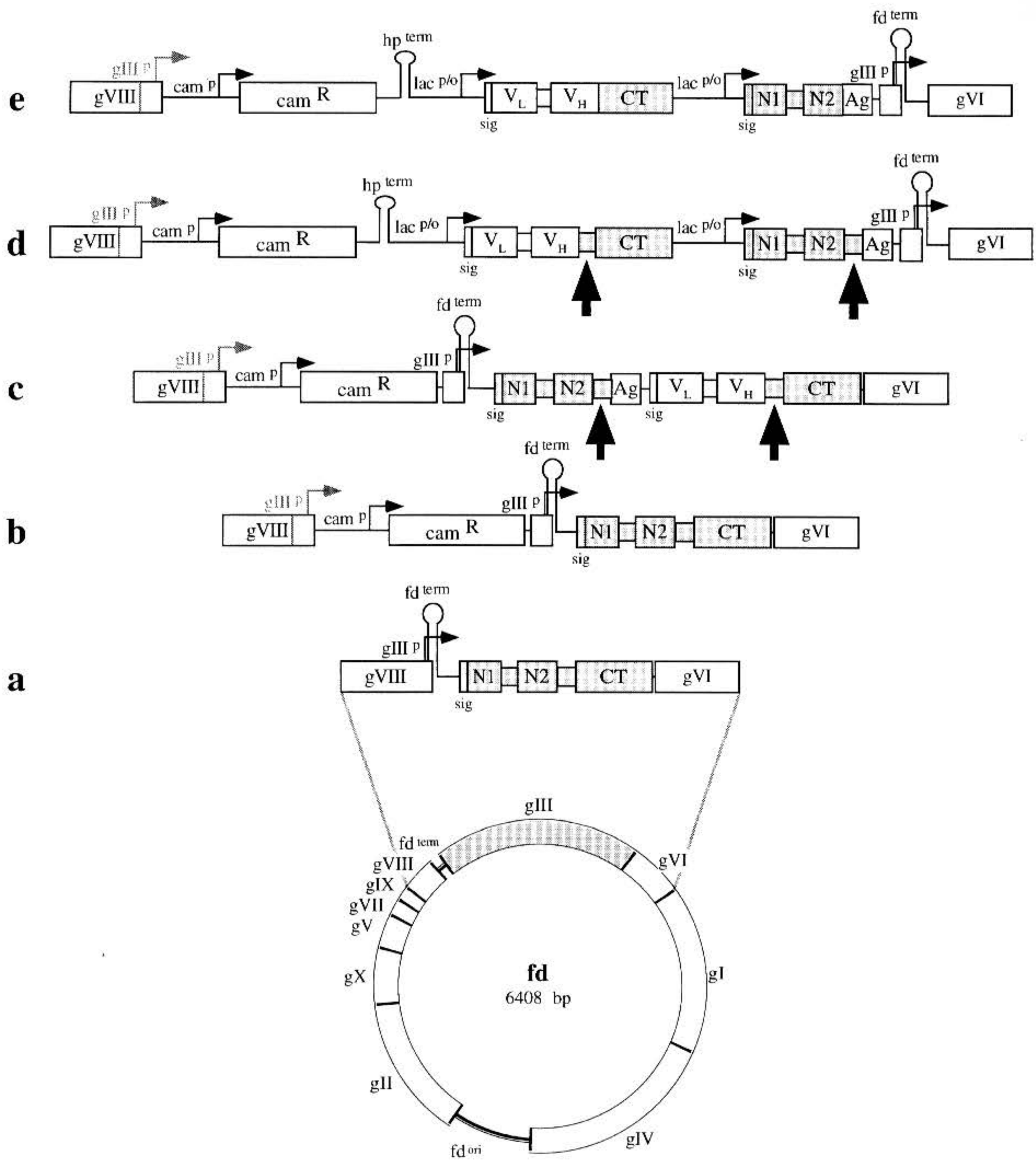

Fig. 3. Organisation of the fd phage genome, magnified between gVIII and gVI. gIII-derived parts are grey. The domain structure is indicated by thick boxes, the glycine-rich linkers by thin boxes, terminators by hairpins, promoters by thin arrows. (a) wt. (b) fCKC indicating insertion site of antibiotic resistance. (c) Version 1 of the SIP system, leading to deletions between the two thick arrows reconstructing wt gIII. (d) Version 2 of the SIP system leading to reconstruction of wt gIII by duplication of the region between the white arrows. (e) Stable SIP system with glycine-rich domains eliminated, indicated by the arrows in (d).

with respect to the N1-N2–Ag and N1–Ag fusions (C. Krebber et al., unpublished).

Only those cells in which a cognate interaction mediates the binding of the two fusion proteins give rise to infectious phages. Since the phage genome carries the information for both the antigen and the antibody, selection can be carried out from a pool of either fusion protein. If pools of both partners are present, cognate pairs will be selected cooperatively in a co-evolutionary fashion. We believe that this system will be particularly useful for simultaneously selecting antibodies against members of antigen libraries, e.g. cDNA libraries. Furthermore, because of the simplicity of the system, mutagenesis of either partner can be carried through many generations. We foresee that the development of a continuous system will be achieved upon increasing the efficiency of the infection process through its mechanistic dissection.

Acknowledgements: We would like to thank Dr. Stefan Klauser, Anke Krebber, Dr. Gerard Wall, Dr. Kosi Gramatikoff, Prof. Walter Schaffner (Universität Zürich), Dr. Vic Ilag, Dr. Liming Ge and Dr. Simon Moroney (Morphosys GmbH München), for technical help and discussions and Morphosys GmbH for financial support.

References

[1] Bradbury, A. and Cattaneo, A. (1995) Trends Neurobiol. 18, 243–249.
[2] Phizicky, E.M. and Fields, S. (1995) Microbiol. Rev. 59, 94–123.
[3] Scott, J.K. and Smith, G.P. (1990) Science 249, 386–390.
[4] Griffiths, A.D., Malmqvist, M., Marks, D.D., Bye, J.M., Embleton, M.J., McCafferty, J., Baier, M., Holliger, K.P., Gorick, B.D., Hughes-Jones, N.C., Hoogenboom, H.R. and Winter, G. (1993) EMBO J. 12, 725–734.
[5] McCafferty, J., Griffiths, A.D., Winter, G. and Chiswell, D.J. (1990) Nature 348, 552–554.
[6] Bass, S., Greene, R. and Wells, J.A. (1990) Proteins Struct. Funct. Genet. 8, 309–314.
[7] Armstrong, J., Perham, R.N. and Walker, J.E. (1981) FEBS Lett. 135, 167–172.
[8] Jakes, K.S., Davis, G.D. and Zinder, N.D. (1988) J. Bacteriol. 170, 4231–4238.
[9] Stengele, I., Bross, P., Garces, X., Giray, J. and Rasched, I. (1990) J. Mol. Biol. 212, 143–149.
[10] Davis, N.G., Boeke, J.D. and Model, P. (1985) J. Mol. Biol. 181, 111–121.
[11] Crissman, J.W. and Smith, G.P. (1984) Virology 132, 445–455.
[12] Duenas, M. and Borrebaeck, C.A.K. (1994) Bio/Technology 12, 999–1002.
[13] Gramatikoff, K., Georgiev, O. and Schaffner W. (1994) Nucl. Acids Res. 22, 5761–5762.
[14] Nelson, F.K., Friedman, S.M. and Smith, G.P. (1981) Virology 108, 338–350.
[15] Duenas, M. and Borrebaeck, C.A.K. (1995) FEMS Lett. 125, 317–321.
[16] Schulze-Gahmen, U., Rini, J.M. and Wilson, I.A. (1993) J. Mol. Biol. 234, 1098–1118.
[17] Prodromou, C. and Pearl, L.H. (1992) Prot. Eng. 5, 827–829.
[18] Knappik, A. and Plückthun, A. (1994) BioTechniques 17, 754–761.
[19] Desplancq, D., King, D.J., Lawson, A.D.G. and Mountain, A. (1994) Prot. Eng. 7, 1027–1033.
[20] Applied Biosystems Inc. (1990) User Bulletin 32, 1–40.
[21] Kitagawa,T., Kanamaru, T., Wakamatsu, H., Kato, H., Yano, S. and Asanuma, Y. (1978) J. Biochem. 84, 491–494.
[22] Sambrook, T., Fritsch, E.F. and Maniatis, T. (1989) Molecular Cloning: a Laboratory Manual, 2nd edn., Cold Spring Harbor, NY.
[23] Smith, G.P. and Scott, J.K. (1993) Methods Enzymol. 211, 228–257.
[24] Knappik, A. and Plückthun, A. (1995) Prot. Eng. 8, 81–89.
[25] Beck, E. and Zink, B. (1981) Gene 16, 35–58.
[26] Zacher, A.N., Stock, C.A., Golden II, J.W. and Smith, G.P. (1980) Gene 9, 127–140.
[27] Nohno, T., Kasai, Y. and Saito, T. (1988) J. Bacteriol. 170, 4097–4102.
[28] Carter, P., Kelley, R.F., Rodrigues, M.L., Snedecor, B., Covarrubias, M., Velligan, M.D., Wong, W.L.T., Rowland, A.M., Kotts, C.E., Carver, M.E., Yang, M., Bourell, J.H., Shepard, H.M. and Henner, D. (1992) Bio/Technology 10, 163–167.