Separatum aus

Behring Institute Mitteilungen

Behring Institute Research Communications

Behring Inst. Mitt., No. **87**, 48–55 (1990)

Properties of F_V and F_{ab} Fragments of the Antibody McPC603 Expressed in *E. coli*

A. PLÜCKTHUN, R. GLOCKSHUBER,
A. SKERRA, J. STADLMÜLLER

Behring Inst. Mitt., No. 87, 48–55 (1990)

Properties of F_V and F_{ab} Fragments of the Antibody McPC603 Expressed in *E. coli*

A. PLÜCKTHUN, R. GLOCKSHUBER, A. SKERRA, J. STADLMÜLLER

Genzentrum der Universität München, Max-Planck-Institut für Biochemie, Am Klopferspitz, D-8033 Martinsried, Germany

Summary

The F_V and F_{ab} fragments of the phosphorylcholine binding antibody McPC603 were functionally expressed in E. coli. *This was achieved by the co-expression and co-secretion of both chains to the periplasm, where correct processing, folding and assembly occurred. Interestingly, the fraction of correctly folded F_{ab} fragment is smaller than that of the F_V fragment in* E. coli. *The intrinsic hapten binding affinity was shown to be identical for the recombinant F_V or F_{ab} fragment, the whole antibody and the F_{ab} fragment obtained by proteolysis from the mouse antibody. Fluorescence and crosslinking analyses showed that the F_V fragment dissociates at high dilution, but that it is stabilized by hapten binding. The recombinant F_V fragement was shown to have catalytic activity to hydrolyze choline-p-nitrophenyl carbonate and constitutes therefore a promising model system with which the structural requirements of catalytic antibodies can be studied by altering the protein itself.*

Introduction

Antibodies hold a unique place in research, clinical diagnostics, and therapy. The invention of strategies to obtain monoclonal antibodies[1] has revolutionized many branches of biological and medical research, by allowing the production of molecules with almost any desired fine-specificity. Nevertheless, this sophisticated selection technique can only take advantage of the sequences present in the natural reservoir, and those that arise through somatic mutation. The next logical step consists of giving the investigator complete control of the antibody sequence. This entails altering the immunoglobin molecule itself by the methods of gene technology.

Several investigators have developed techniques for expressing altered antibodies in various cell lines (for recent reviews, see ref. 2, 3). This approach leads to correctly glycosylated and assembled molecules, and may be very useful in the production of antibodies for human therapy[4]. However, it does not offer the same experimental flexibility that a microbial expression system would, especially with *E. coli* as the expression host. Due to this flexibility, expression in *E. coli* may considerably facilitate the development and testing of antibody variants. There may also be instances in research, clinical diagnostics and therapy, where the use of an antigen binding fragment (e.g. the F_{ab} fragment or the F_V fragment) may be desirable. F_V fragments could in principle be useful, e.g. in cancer therapy and diagnostics, since their small size could result in better tissue penetration, lower antigenicity and altered pharmacokinetics. It is therefore essential to have a complete understanding of their properties. F_V fragments can usually not be obtained in high yields from eukaryotic expression systems[5] and F_V fragments are very difficult to prepare by proteolysis[6].

Some time ago, we developed an *E. coli* expression system that combines the advantage of expression in the native state with those of *E. coli* as expression host[7]. We used as a model system the especially well characterized antibody McPC603, a phosphorylcholine binding IgA of the mouse. The sequence [8,9], the crystal

structure of its F_{ab} fragment[10,11], as well as binding constants and binding kinetics of several haptens had been determined[12–17], facilitating the characterization of recombinant products. We obtained the genes for the variable domains synthetically (encoding the F_V fragment) and also linked them to the appropriate, cloned constant domains (to encode the F_{ab} fragment whose crystal structure had been determined)[18].

The expression system is designed to achieve co-expression and co-secretion of both chains (either only the variable domains V_L and V_H to give the F_V fragment, or the complete light chain (V_LC_L) and the first two domains of the heavy chain (V_HC_H) to give the F_{ab} fragment)[19]. An artificial operon was constructed in which both genes were under the control of the inducible *lac* promoter. Both chains fold, their disulfide-bonds form and they associate to the correct heterodimer. This expression in the native state allows the recombinant F_V or F_{ab} fragment to be purified from *E. coli* with extraordinary ease: by the use of a hapten-affinity column in a single step.

E. coli as an expression host has a number of attractive features: Genetic manipulations are simple, fermentation is relatively straightforward, and transformation is efficient. It may therefore constitute an ideal system in which random mutagenesis strategies for antibodies can be developed. Due to the fast growth of *E. coli* and the well established genetic techniques, site-directed mutagenesis experiments and production of the altered protein can be performed in a fairly short time with our expression system.

Hapten Binding

The functionality of the recombinant F_V and F_{ab} fragments was investigated by the determination of the hapten binding constants (ref. 7; *Skerra, Glockshuber* and *Plückthun*, manuscript in preparation). Both equilibrium dialysis[7] and fluorescence measurements[7a] were used. In all cases, it could be demonstrated that there is no significant difference in the intrinsic association constant of the hapten to the whole antibody from mouse, the $F_{ab'}$ fragment prepared by proteolysis of the mouse antibody, the recombinant F_{ab} fragment from *E. coli* or the recombinant F_V fragment from *E. coli*.

In the case of the F_V fragment, however, the dissociation of the fragment that is observed at high dilution (see below) leads to a dependence of the measured (apparent) hapten binding constant on protein concentration. If the two chains V_H and V_L making up the F_V fragment are covalently crosslinked, on the other hand, a value identical to all other hapten association constants is found. This indicates that the recombinant F_V fragment has the same intrinsic binding constant as all other fragments. The F_V fragment as well as the recombinant F_{ab} fragment are therefore suitable model systems for the study of antigen-antibody interactions.

As a first example of the use of site-directed mutagenesis for delineating quantitative contributions of various interactions to free energies of hapten binding, the residue tyr H33 was changed to phe (Figure 1). This structurally similar residue is no longer capable of forming a hydrogen bond to one of the terminal oxygens of the phosphate group of phosphorylcholine. Such a change lowers the binding affinity of phosphorylcholine from $1.6 \times 10^5\ M^{-1}$ to $2.45 \times 10^3\ M^{-1}$.

A systematic mutagenesis study and binding analysis with a variety of synthetic haptens and analogs will provide a useful database, against which theoretical methods for the prediction of binding constants can be tested and calibrated. Such a study will more clearly delineate different contributions to the observed free energy of binding and aid in our understanding of the design of optimal binding sites and optimal ligands.

Fig. 1: The phosphorylcholine binding site of the antibody McPC603 (stereo view). The atom types are labeled with oxygen in dark grey, nitrogen in grey, carbon in white and phosphorus in light grey. The residues shown are from left to right: aspL97, trpH107, asnH101, phosphorylcholine, gluH35, tyrH33 and argH52.

Association of the Variable Domains

The stability and assembly of the F_V fragment was investigated. We separated V_L and V_H by anion exchange-chromatography in the presence of urea under non-reducing conditions[23a]. Both chains were then renatured by the removal of the denaturant. Experiments with FPLC size exclusion chromatography showed that, under the conditions of the chromatography experiment, V_L dimerized quantitatively[20]. The sequence of V_L of McPC603, a kappa chain, is 63% identical to the human kappa chain of REI[21]. REI is a Bence-Jones protein (V_L dimer) isolated from the urine of a multiple myeloma patient and its structure was determined at high resolution[22,23]. Our working assumption was that V_L of McPC603 dimerizes in a structure very similar to that of REI. In Figure 2, a superposition of REI and V_L of McPC603 is shown. Recently, we could verify the model by determining the crystal structure of the V_L domain[23a] produced in *E. coli* at a resolution of 2.0 Å.

On the other hand, no ordered dimerization of V_H with itself could be demonstrated. Under identical conditions, a mixture of monomers and a broad peak eluting at the molecular weight of dimers was found by FPLC size exclusion chromatography for V_H, in contrast to the sharp peak obtained with V_L

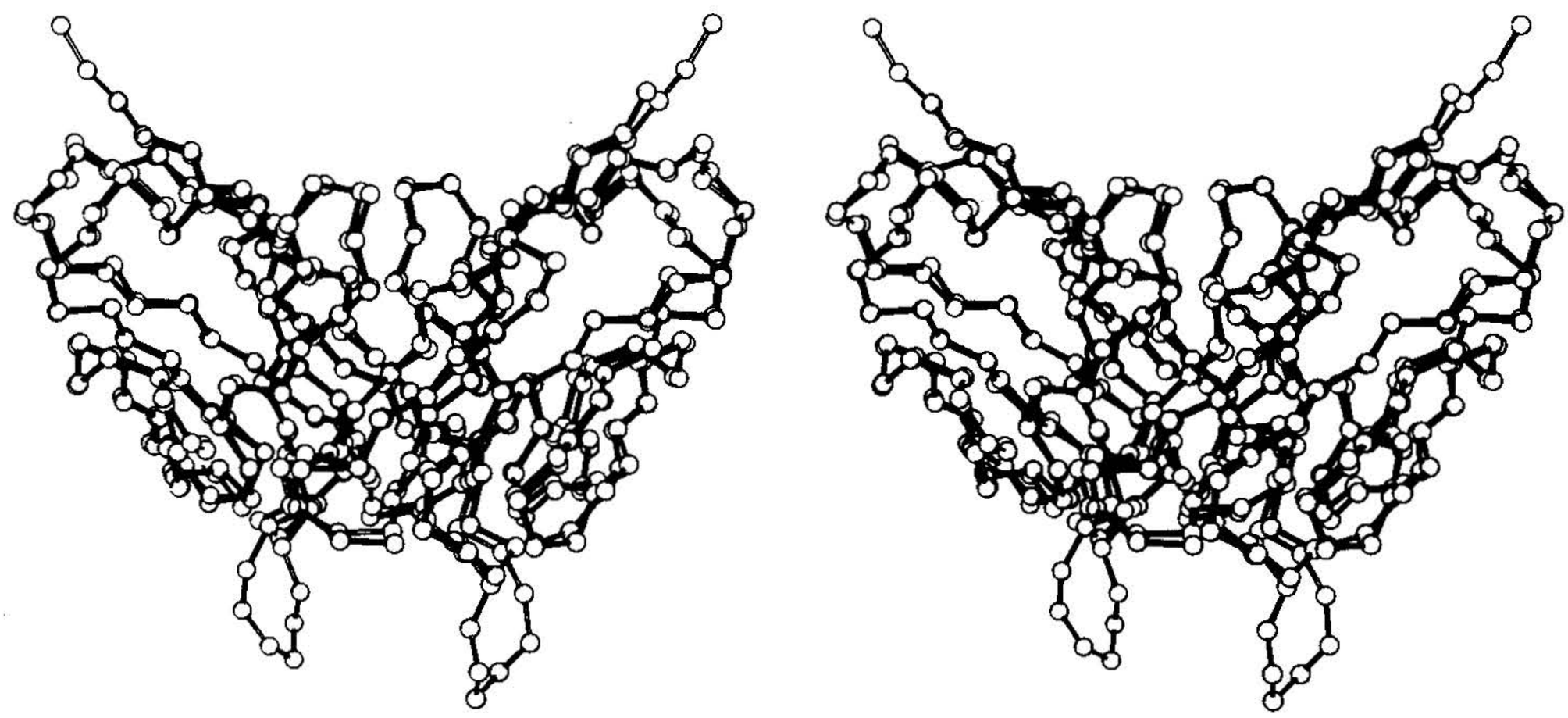

Fig. 2: Stereo view of the superposition of the framework region of REI and V_L of McPC603. The REI dimer is shown with filled bonds and the McPC603-V_L dimer with open bonds. The circles correspond to α-carbon positions. Note the longer V_L-CDR1 loop of McPC603.

dimers. This indicates that V_H exists as monomers and dimeric aggregates with a mixture of molecular shapes and not a defined dimer conformation.

It is possible to crosslink the V_H and V_L chains by glutaraldehyde, while the V_L dimer cannot be crosslinked with this reagent. This is probably at least in part a consequence of the position of lysine residues in both structures. Crosslinking experiments at different dilutions in the presence and absence of the hapten phosphorylcholine have shown that there is a concentration-dependent equilibrium for the association of V_L with V_H, which is shifted towards the F_V fragment in the presence of phosphorylcholine. This is made plausible by the fact that phosphorylcholine has interactions with both the light and the heavy chain (Figure 1). The relevant equilibria are described by the following scheme:

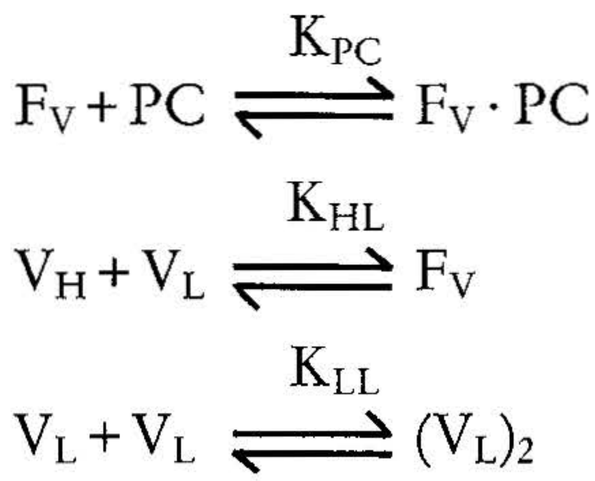

While the hapten-binding equilibrium constant K_{PC} could be measured very accurately by fluorescence and equilibrium dialysis techniques and was found to be $1.6 \times 10^5\ M^{-1}$ [$K_{diss} = 6.25 \times 10^{-6}$ M], the other two equilibria can presently not be obtained with the same accuracy and have to be estimated from crosslinking and fluorescence dilution experiments. The protein association constants K_{HL} is around $10^6\ M^{-1}$ (ref. 7a), while the light chain dimer association constant K_{LL} is considerably weaker and not yet precisely known.

Stability and Folding

The recombinant F_V fragment was tested for the presence of the disulfide bonds. An amino acid analysis was carried out after reaction with 4-vinyl-pyridine. It was found that no free cysteine was present in the native F_V fragment, even in the presence of urea to make all residues accessible for derivatization, but that all four cysteine residues could be quantitatively derivatized after reduction of the protein. This demonstrates that both disulfide bonds of the purified F_V fragment must have been quantitatively formed.

To investigate whether both disulfide bonds are required for folding of the F_V fragment *in vivo*, two mutant F_V fragments were constructed (*Glockshuber* and *Plückthun*, manuscript in preparation). In one case, cysL23 and cysL94 were both changed to alanine residues and in the other case, cysH22 and cysH98 were both changed to alanine residues. In both double mutants, no functional protein could be isolated from *E. coli*, indicating that the presence of both disulfide bonds is absolutely essential for folding *in vivo* and expression in *E. coli*. This result does not distinguish between an unstable native state in the absence of the disulfide bond or a requirement for early disulfide bond formation in the folding process. Functional antibodies are known that do not possess a disulfide bond in the V_H domain[24] but the differences between these two experimental situations are not yet understood. We are currently conducting experiments to delineate the folding process in more detail.

The F_{ab} fragment could be obtained and purified from *E. coli* with a strategy analogous to that used for the F_V fragment[19]. Interestingly, the fraction of correctly folded protein is consistently smaller than for the F_V fragment under identical experimental conditions. This system may be a good model for studying factors that influence the *in vivo* folding of a heterologous, dimeric protein. We are currently investigating both intragenic as well as extragenic factors influencing the yield of folding *in vivo* (*Skerra* and *Plückthun*, manuscript in preparation). For instance, the second intradomain disulfide bond within the C_H1 domain in mouse IgA connecting cysH198 and cysH222 was removed (Figure 3), since it was conceivable that a disulfide-rearrangement might lead to a slow folding step and the con-

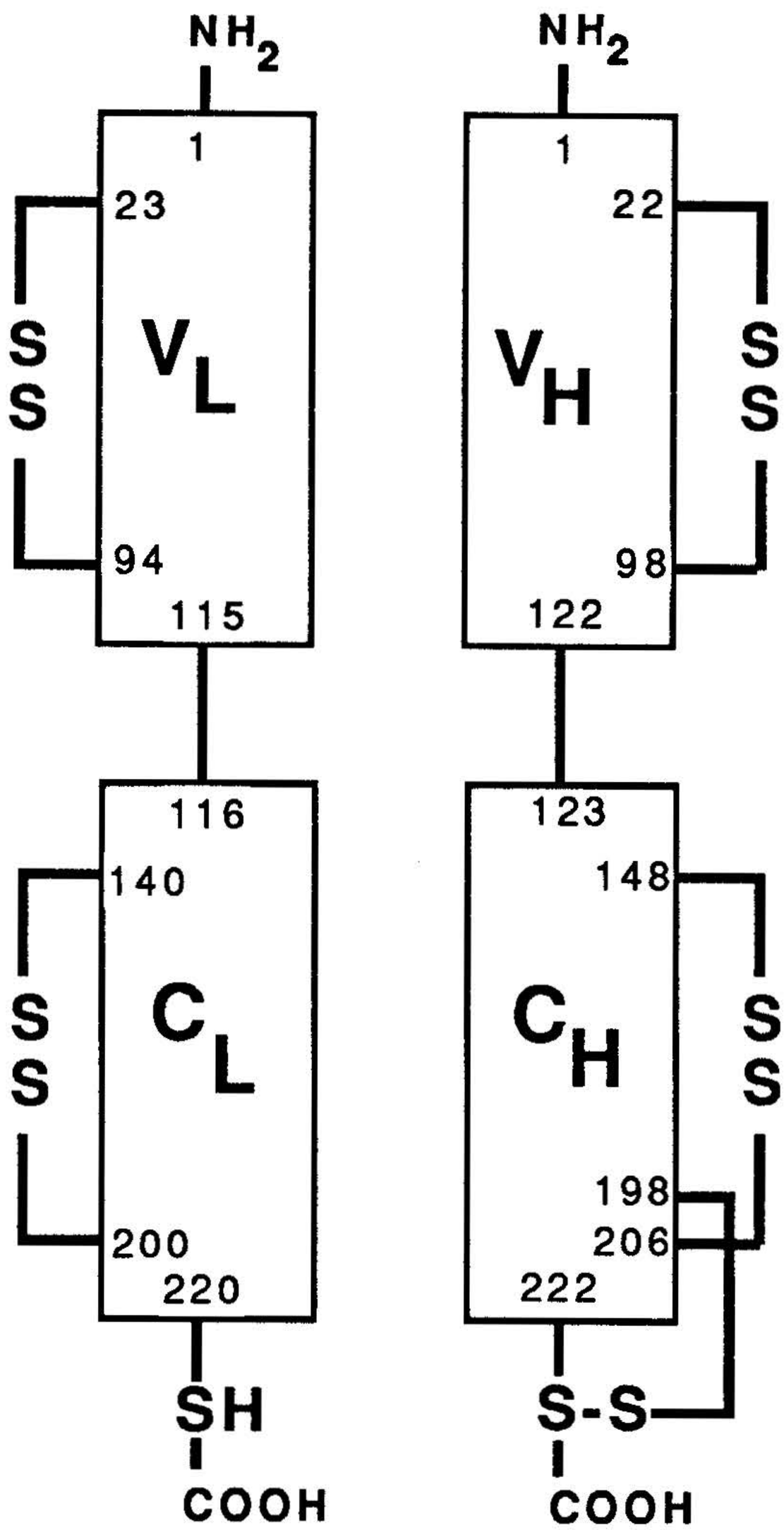

Fig. 3: Schematic diagram of the disulfide bonds in the F_{ab} fragment of McPC603. Note the absence of any intermolecular disulfide bonds and the presence of a second intradomain disulfide bond (H198–H222) in C_H. The numbers indicate the positions of all cysteine residues as well as the domain boundaries used in the recombinant F_V fragment.

sequent accumulation and aggregation of a folding intermediate. However, this disulfide bond in C_H1 was not found to influence the folding yield beyond experimental error since a double mutant carrying alanine residues in both positions yielded a similar amount of recombinant F_{ab} fragment as the wild-type with the disulfide bond present.

Catalytic Activity

It was *Haldane*[25] and *Pauling*[26] who first postulated that an enzyme should be complementary in structure to the transition state of the reaction it catalyzes. Thus, part of the intrinsic binding energy of the ground state may be used to bring the bound substrate closer to the transition state. Indeed, many compounds resembling the transition state ("transition state analogs") have been synthesized and been found to be excellent inhibitors, binding to the enzymes with higher affinity than the substrate[27].

Jencks[28] first suggested the reversal of this idea, i.e. to elicit antibodies against transition state analogs. Several investigators have used this strategy (reviews: Ref. 29–32), but real success was only possible after the discovery of a method to produce monoclonal antibodies[1]. The reason for this lies in the rather low catalytic activities obtained with this approach and the consequently high amounts of protein necessary for assays. Recently, by raising monoclonal antibodies against suitable transition state analogs, a variety of reactions have been moderately catalyzed[29–32].

Our strategy has been to develop techniques to modify the catalytic protein itself[18]. The antibody McPC603 is a very suitable model system for investigating the structural requirements for catalysis since not only is the three-dimensional structure known, but we have also developed a convenient expression system for producing modified protein. McPC603 binds phosphorylcholine, a phosphate ester, and should therefore be capable of binding the tetrahedal intermediate of the hydrolysis of analogous carboxylate esters or of carbonate esters better than the planar ester substrate itself (Figure 4). By Hammond's postulate, the transition states leading to and away from the tetrahedral intermediate should then also be stabilized. Indeed, esterases and proteases have been found to be complementary in structure to the tetrahedral inter-

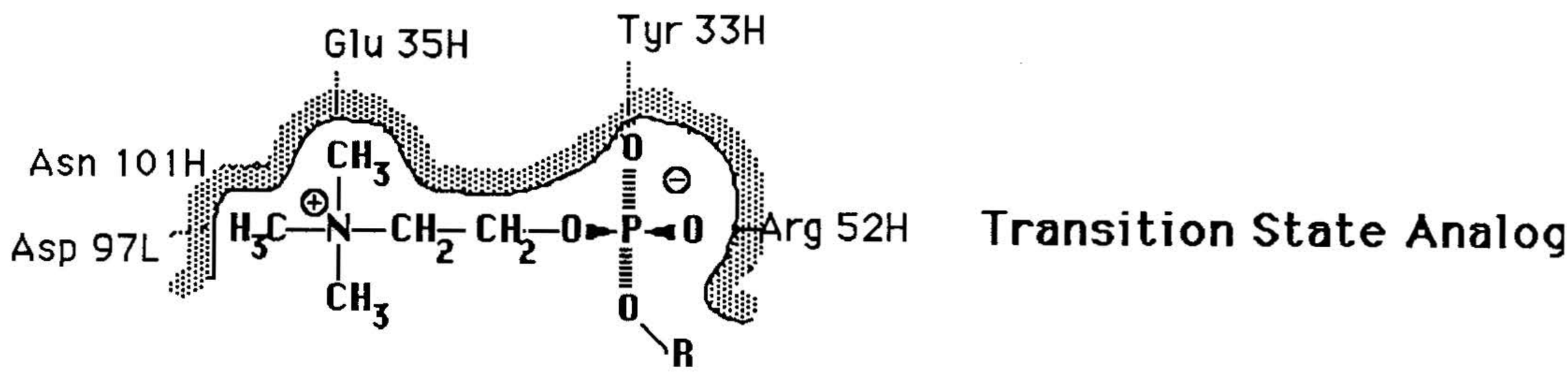

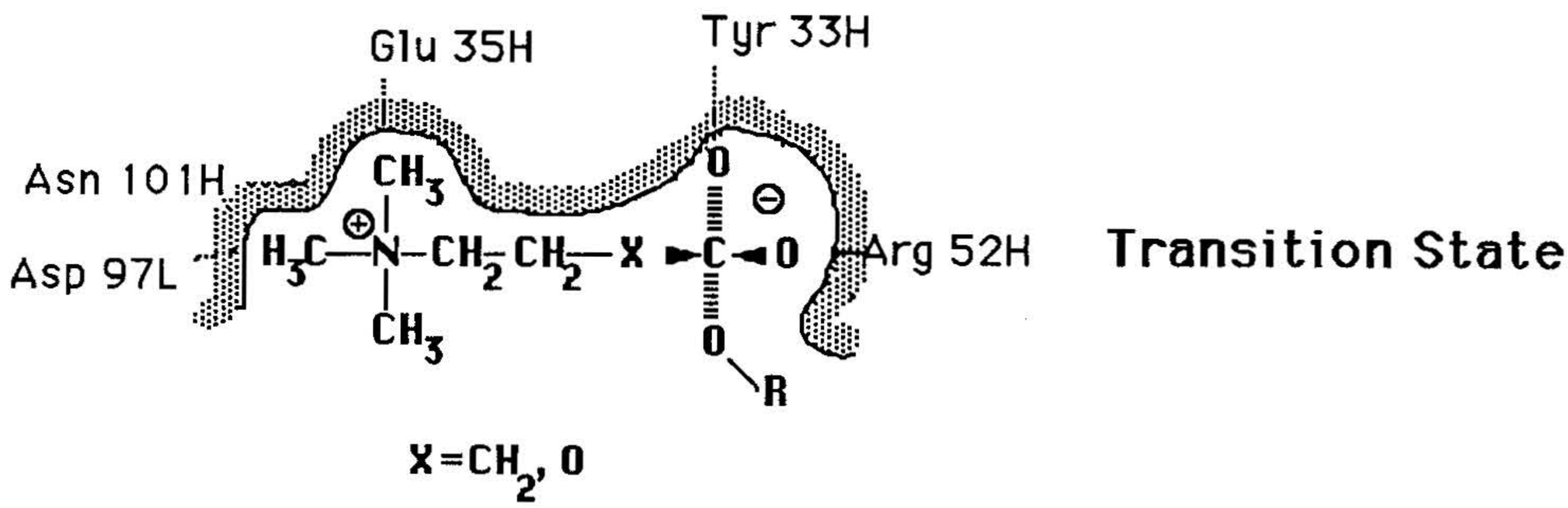

Fig. 4: Schematic drawing of the binding of the reaction intermediate of an ester or a carbonate hydrolysis to the hapten binding site of McPC603. The analogy to hapten binding is indicated. The hapten may be viewed as a transition state analog (see text).

mediate[31,33] and numerous phosphates and phosphonates have been reported to be transition state analogs and good inhibitors for enzymatic esterases or amidases (reviewed e.g. in ref. 20, 29–32). Furthermore, a serine protease, stripped of its catalytic triad, was found to show residual activity, probably by this transition state stabilization[34].

The recombinant F_V fragment of McPC603 obtained from *E. coli* was tested for the catalysis of the hydrolysis of choline-p-nitrophenyl carbonate. Indeed, a rate acceleration with a K_M value of about 1.3 mM and a k_{cat} value of about 0.05 min^{-1} could be demonstrated (*Stadlmüller* and *Plückthun*, in preparation). These rates are comparable to those of the related antibodies M167 and T15 purified from mouse ascites[35, 36] of which the three-dimensional structure is not known, however. While the rate acceleration is rather modest, this experiment shows that a *recombinant* antibody obtained from *E. coli* can demonstrate catalytic activity. More importantly, McPC603 is a system with a known three-dimensional structure. This fact should allow us, by systematic modification of both the substrate and the antibody, to get further insight into the exact requirements for efficient catalysis.

While immunization with appropriately designed transition state analogs will certainly provide a good starting point for a catalytic antibody, it remains questionable whether very efficient catalysts can be obtained relying only on the available repertoire. More likely, a combination of both approaches, i.e. the modification of a moderately active catalytic antibody by either "rational engineering" or random mutagenesis will be required for catalytic antibodies to become useful reagents in research, technology and medicine. The *E. coli* expression system described here may be particularly useful for developing the necessary methodology.

Conclusions

The facile expression of antigen binding fragments (F_V and F_{ab} fragments) of the well characterized phosphorylcholine binding antibody McPC603 has permitted us to investigate the properties of these recombinant antigen binding fragments in detail. We showed, for instance, that this F_V fragment is completely functional and therefore a good model for antigen-antibody interactions, but that it suffers from too low an interdomain association constant to be technically or medically useful without further structural changes. Alterations to improve the association were also introduced into the protein[7a]. We were also able to show that the mutagenesis of the antibody can provide more detailed information on the hapten-antibody interactions, gradually leading to an improved understanding and the quantitation of the energetic contributions of single amino acid residues to hapten binding.

Also, we have reported the first example of a catalytic antibody produced in native form in *E. coli*. As an added bonus, the three-dimensional structure of it is known. This protein may constitute a promising model system with which to investigate strategies for the improvement of catalytic efficiency, both by "engineering" and by random mutagenesis.

What promise does expression of functional antibody fragments in *E. coli* hold for medical applications, especially therapy? The most notable feature of this expression system is the experimental convenience with which mutants can be generated and tested in a fairly short time. This fact and the promise for random mutagenesis might make *E. coli* expression a particularly valuable intermediate with which to improve the properties of a diagnostic or therapeutic antibody. For instance, the binding affinity might be increased by substitutions that cannot naturally occur in antibodies, or an unwanted secondary binding specificity might be suppressed by mutagenesis and subsequent testing in *E. coli*. The final version of the "improved" antibody might then be expressed in a eukaryotic system, e.g. to obtain a complete human monoclonal antibody possessing the improved properties.

E. coli holds yet another promise: With few more experimental difficulties than in the construction of point mutants, the structure of whole domains of the antibody may be modified to variants not existing in nature. Single-chain F_V fragments[7a,37,38] are just one such example, and many other derivatives and hybrid molecules are conceivable. Expression in *E. coli* may provide for the fairly rapid testing of the viability of such approaches.

Acknowledgement

This work was supported by grant BCT0372 from the Bundesministerium für Forschung und Technologie to A. P. and a predoctoral fellowship from the Stiftung Volkswagenwerk and the Fonds der Chemischen Industrie to A. S.

References

1 *Koehler, G. & Milstein, C.* (1975) Continuous cultures of fused cells secreting antibody of predefined specificity. Nature *256*, 495–497.

2 *Morrison, S. L. & Oi, V. T.* (1989) Genetically engineered antibody molecules. Adv. Immunol. *44*, 65–92.

3 *Brüggemann, M. & Neuberger, M. S.* (1988) Novel antibodies by DNA Manipulation. Progress in Allergy *45*, 91–105.

4 *Riechmann, L., Clark, M., Waldmann, H. & Winter, G.* (1988) Reshaping human antibodies for therapy. Nature *332*, 323–327.

5 *Riechmann, L, Foote, J. & Winter, G.* (1988) Expression of an antibody F_V fragment in myeloma cells. J. Mol. Biol. *203*, 825–828.

6 *Inbar, D., Hochman, J. & Givol, D.* (1972) Localization of antibody-combining sites within the variable portions of heavy and light chains. Proc. Natl. Acad. Sci. USA *69*, 2659–2662.

7 *Skerra, A. & Plückthun, A.* (1988) Assembly of a functional immunoglobulin F_V fragment in Escherichia coli. Science *240*, 1038–1041.

7a *Glockshuber, R., Malia, M., Pfitzinger, I. & Plückthun, A.* (1990) A comparison of strategies to stabilize immunoglobulin F_V fragments. Biochemistry *29*, 1362–1367.

8 *Rudikoff, S. & Potter, M.*(1974) Variable region sequence of the heavy chain from a phosphorylcholine binding myeloma protein. Biochemistry *13*, 4033–4038.

9 *Rudikoff, S., Satow, Y., Padlan, E., Davies, D. & Potter, M.* (1981) Kappa chain structure from a crystallized murine $F_{ab'}$: role of joining segment in hapten binding. Mol. Immunol. *18*, 705–711.

10 *Satow, Y., Cohen, G. H., Padlan, E. A. & Davies, D. R.* (1986) Phosphocholine binding immunoglobulin F_{ab} McPC603: An X-ray diffraction study at 2.7Å. J. Mol. Biol. *190*, 593–604.

11 *Segal, D. M., Padlan, E. A., Cohen, G. H., Rudikoff, S., Potter, M. & Davies, D. R.* (1974) The three-dimensional structure of a phosphorylcholine-binding mouse immunoglobulin F_{ab} and the nature of the antigen binding site. Proc. Natl. Acad. Sci. USA *71*, 4298–4302.

12 *Leon, M. A. & Young, N. M.* (1971) Specificity for phosphorylcholine of six murine myeloma proteins reactive with pneumococcus C polysaccharide and β-lipoprotein. Biochemistry *10*, 1424–1429.

13 *Young, N. M. & Leon, M. A.* (1977) The binding of analogs of phosphorylcholine by the murine myeloma proteins McPC603, MOPC167 and S107. Immunochemistry *14*, 757–761.

14 *Metzger, H., Chesebro, B., Hadler, N. M., Lee, J. & Otchin, N.* (1971) Modification of immunoglobulin combining sites. In: Progress in Immunology, Proceedings of the 1st Congress of Immunology. (Amos, B., ed.) Academic Press, New York, pp. 253–267.

15 *Goetze, A. M. & Richards, J. H.* (1977) Magnetic resonance studies of the binding site interactions between phosphorylcholine and specific mouse myeloma immunoglobulin. Biochemistry *16*, 228–232.

16 *Goetze, A. M. & Richards, J. H.* (1977) Structure-function relations in phosphorylcholine-binding mouse myeloma proteins. Proc. Natl. Acad. Sci. U.S.A. *74*, 2109–2112.

17 *Goetze, A. M. & Richards, J. H.* (1978) Molecular studies of subspecificity differences among phosphorylcholine-binding mouse myeloma antibodies using ^{31}P nuclear magnetic resonance. Biochemistry *17*, 1733–1739.

18 *Plückthun, A., Glockshuber, R., Pfitzinger, I., Skerra, A. & Stadlmüller, J.* (1987) Engineering of antibodies with a known three-dimensional structure. Cold Spring Harbor Symp. Quant. Biol. *52*, 105–112.

19 *Plückthun, A. & Skerra, A.* (1989) Expression of functional antibody F_V and F_{ab} fragments in *E. coli*. Meth. Enzymol. *178*, 497–515.

20 *Plückthun, A., Skerra, A., Glockshuber, R. & Stadlmüller, J.* (1988) Synthetic antibodies with a known three-dimensional structure. In: Protein Structure and Protein Engineering, 39th Colloquium Mosbach, (Winnacker, E. L. & Huber, R., eds.) pp. 123–131.

21 *Palm, W. & Hilschmann, N.* (1975) Die Primärstruktur einer kristallinen monoklonalen Immunglobulin-L-Kette vom κ-Typ, Subgruppe I (Bence-Jones-Protein Rei). Hoppe Seyler's Z. Physiol. Chem. *356*, 167–191.

22 *Epp, O., Colman, P., Fehlhammer, H., Bode, W., Schiffer, M., Huber, R. & Palm, W.* (1974) Crystal and molecular structure of a dimer composed of the variable portions of the Bence-Jones protein REI. Eur. J. Biochem. *45*, 513–524.

23 *Epp, O., Lattmann, E. E., Schiffer, M., Huber, R. & Palm, W.* (1975) The molecular structure of a dimer composed of the variable portions of the Bence-Jones protein REI refined at 2.0-Å resolution. Biochemistry *14*, 4943–4952.

23a *Glockshuber, R., Steipe, B., Huber, R. & Plückthun, A.* (1990) Crystallization and preliminary X-ray studies of the V_L domain of the antibody McPC603 produced in *Escherichia coli*. J. Mol. Biol. *213*, 613–615.

24 *Rudikoff, S. & Pumphrey, J. G.* (1986) Functional antibody lacking a variable-region disulfide bridge. Proc. Natl. Acad. Sci. U. S. A. *83*, 7875–7878.

25 *Haldane, J. B. S.* (1930) Enzymes. Longmans, Green and Co., London; (1965) MIT Press, Cambridge, MA.

26 *Pauling, L.* (1946) Molecular architecture and biological reactions. Chem. Eng. News *24*, 1375–1377.

27 *Wolfenden, R.* (1976) Transition state analog inhibitors and enzyme catalysis. Annu. Rev. Biophys. Bioeng. *5*, 271–306.

28 *Jencks, W. P.* (1969) Catalysis in chemistry and enzymology, McGraw-Hill, New York, 282–291.

29 *Green, B. S.* (1989) Monoclonal antibodies as catalysts and templates for organic chemical reactions. Adv. Biotechnol. Processes *11*, 359–393.

30 *Schultz, P. G.* (1988) The interplay between chemistry and biology in the design of enzymatic catalysts. Science *240*, 426–433.

31 *Kraut, J.* (1988) How do enzymes work? Science *242*, 533–540.

32 *Lerner, R. A. & Benkovic, S. J.* (1988) Principles of antibody catalysis. Bioessays *9*, 107–112.

33 *Kraut, J.* (1977) Serine proteases: structure and mechanism of catalysis. Annu. Rev. Biochem. *46*, 331–358.

34 *Carter, P. & Wells, J. A.* (1988) Dissecting the catalytic triad of a serine protease. Nature *332*, 564–568.

35 *Pollack, S. J., Jacobs, J. W. & Schultz, P. G.* (1986) Selective chemical catalysis by an antibody. Science *234*, 1570–1573.

36 *Pollack, S. J. & Schultz, P. G.* (1987) Antibody catalysis by transition state stabilization. Cold Spring Harbor Symp. Quant. Biol. *52*, 97–104.

37 *Bird, R. E., Hardman, K. D., Jacobson, J. W., Johnson, S., Kaufman, B. M., Lee, S. M., Lee, T., Pope, S. H., Riordan, G. S. & Whitlow, M.* (1988) Single chain antigen-binding proteins. Science *242*, 423–426.

38 *Huston, J. S., Levinson, D., Mudgett-Hunter, M., Tai, M. S., Novotny, J., Margolies, M. N., Ridge, R. J., Bruccoleri, R. E., Haber, E. Crea, R. & Oppermann, H.* (1988) Protein engineering of antibody binding sites: Recovery of specific activity in an anti-digoxin single-chain F_V analogue produced in *Escherichia coli*. Proc. Natl. Acad. Sci. U. S. A. *85*, 5879–5883.